# RECORD OF REVISIONS

Main revised contents and corrective measures are described in a table.
Find the main revised point and corrective measure through the reference page.

| Last digit of the code No. | Month of revision | Main revised point and corrective measure [Search word] | Reference page |
|---|---|---|---|
| 2 | May 2014 | Added these models<br>• WG1605-N-E3<br>• WG1605-LN-E3<br>• WG1605-GLN-E3 | – |
| 3 | November 2016 | Corrected the maintenance checklist | 2-7 |
| | | Corrected the information about checking and adjusting these items<br>• Ignition coil<br>• Throttle body<br>• TMAP sensor | – |
| | | Added the information about caution point of oxygen sensor when exchange it | 3-17 |
| 4 | March 2017 | Added the following maintenance item<br>• Lockoff valve filter | 2-7<br>2-24 |
| 5 | March 2021 | Corrected these errors<br>• Changing the status from the allowable limit to the service limit<br>• Changing the status from the factory specification to the service specification<br>• Changing the status from ohmmeter to resistance range of circuit tester | – |
| 6 | March 2022 | Added the information about adjusting a fan belt tension | 2-15<br>2-18<br>3-29 |
| | | Improved the procedure of measuring compression pressure | 3-36 |
| | | Corrected the word related to maintenance interval of the following item<br>• Cleaning of spark plug | 2-7<br>2-15 |
| 7 | September 2023 | Due to corrected the tightening torques of nuts | 3-35 |

# SAFETY FIRST

## 1. Safety first

**SAFETY FIRST**
- **This symbol, the industry's "Safety Alert Symbol", is used throughout this manual and on labels on the machine itself to warn of the possibility of personal injury. Read these instructions carefully.**
- **It is essential that you read the instructions and safety regulations before you attempt to repair or use this unit.**

**DANGER**
- **Indicates an imminently hazardous situation which, if not avoided, will result in death or serious injury.**

**WARNING**
- **Indicates a potentially hazardous situation which, if not avoided, could result in death or serious injury.**

**CAUTION**
- **Indicates a potentially hazardous situation which, if not avoided, may result in minor or moderate injury.**

**IMPORTANT**
- **Indicates that equipment or property damage could result if instructions are not followed.**

**NOTE**
- **Gives helpful information.**

## 2. Before you start service

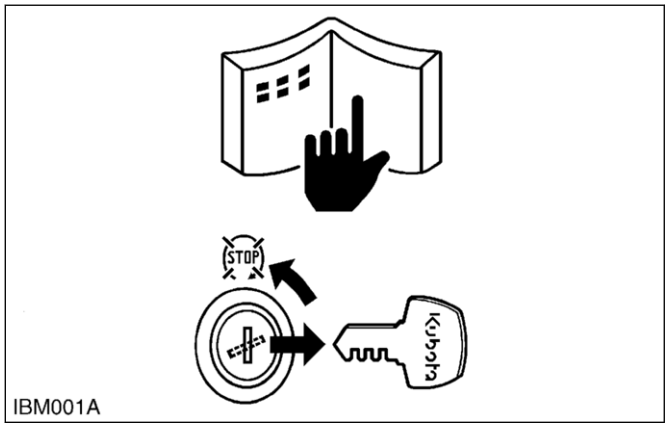

IBM001A

- Read all instructions and safety instructions in this manual and on your engine safety decals.
- Clean the work area and engine.
- Park the machine on a stable and level ground.
- Let the temperature of the engine decrease before you start a job.
- Stop the engine, then remove the key.
- Disconnect the battery negative cable.
- Hang a **[DO NOT OPERATE]** tag in the operator station.

## 3. Start safely


IBM011A

- Do not do the procedures below when you start the engine.
  - Short across starter terminals
  - Bypass the safety start switch
- Do not make unauthorized modifications to the engine. This can cause damage and decrease the engine life.

# 2. Specification for WG1605-GL-E3

| Model | WG1605-GL-E3 | |
|---|---|---|
| | Gasoline fuel | LPG fuel |
| Number of cylinder | 4 | |
| Type | Vertical, water cooled, 4-cycle dual fuel (Gasoline/LPG) engine | |
| Bore × Stroke | 79.0 × 78.4 mm (3.11 × 3.09 in.) | |
| Total displacement | 1.537 L (93.79 cu.in.) | |
| SAE Gross Intermittent | 42.5 kW (57.0 HP)/3600 $min^{-1}$ (rpm)<br>37.0 kW (49.6 HP)/3000 $min^{-1}$ (rpm) | 41.0 kW (55.0 HP)/3600 $min^{-1}$ (rpm)<br>36.0 kW (48.3 HP)/3000 $min^{-1}$ (rpm) |
| ISO/SAE Net Intermittent | 38.5 kW (51.6 HP)/3600 $min^{-1}$ (rpm)<br>33.5 kW (44.9 HP)/3000 $min^{-1}$ (rpm) | 37.1 kW (49.8 HP)/3600 $min^{-1}$ (rpm)<br>32.5 kW (43.6 HP)/3000 $min^{-1}$ (rpm) |
| ISO Net Continuous | 30.8 kW (41.3 HP)/3600 $min^{-1}$ (rpm)<br>26.8 kW (35.9 HP)/3000 $min^{-1}$ (rpm) | 29.7 kW (39.8 HP)/3600 $min^{-1}$ (rpm)<br>26.1 kW (35.0 HP)/3000 $min^{-1}$ (rpm) |
| Maximum bare speed | 3575 to 3625 $min^{-1}$ (rpm)<br>2975 to 3025 $min^{-1}$ (rpm) | |
| Minimum bare idling speed | 725 to 775 $min^{-1}$ (rpm) | |
| Cylinder head | Overhead-Valve | |
| Ignition system | Full transistor battery ignition type | |
| Governor | Electronic governor | |
| Direction of rotation | Counter-Clockwise (Viewed from flywheel side) | |
| Spark plug type/Spark plug gap | NGK IFR6F8DN 0.70 to 0.80 mm (0.028 to 0.031 in.) | |
| Ignition timing | 0.45 rad (26°) before T.D.C./3000 $min^{-1}$ (rpm),<br>3600 $min^{-1}$ (rpm)<br>0.17 rad (10°) before T.D.C./750 $min^{-1}$ (rpm),<br>800 $min^{-1}$ (rpm) | 0.35 rad (20°) before T.D.C./3000 $min^{-1}$ (rpm),<br>3600 $min^{-1}$ (rpm)<br>0.17 rad (10°) before T.D.C./750 $min^{-1}$ (rpm),<br>800 $min^{-1}$ (rpm) |
| Firing order | 1-3-4-2 | |
| Compression ratio | 9.1: 1 | |
| Lubricating system | Forced lubrication by trochoid pump | |
| Oil pressure indication | Electrical type switch | |
| Lubricating filter | Full flow paper filter (Cartridge type) | |
| Cooling system | Pressurized radiator, forced circulation with water pump | |
| Starting system | Electric starting with starter | |
| Starting motor | 12 V, 1.0 kW | |
| Battery | 12 V, 52 AH or Equivalent | |
| Charging Alternator | 12 V, 480 W, 720 W | |
| Fuel | *Unleaded automobile gasoline | Commercial LPG |
| Lubricating oil | Better than SL Class (API) SAE 10W-30 | |
| Lubricating oil capacity | 6.0 L (1.6 U.S.gals) | |
| Catalytic muffler/Converter | Three way catalyst | |
| Weight (Dry) | 121 kg (267 lbs) | |
| Application | General power source | |

**NOTE**
***The specification described above is of the standard engine of each model.**
***Conversion formula: HP = 0.746 kW, PS = 0.7355 kW**

# 1. Three-way catalyst

A three-way catalyst is a catalyst that oxidizes HC to $CO_2$ and $H_2O$ and also CO to $CO_2$ respectively and at the same time reduces $NO_x$ to $N_2$ near the stoichiometric ratio.
The main basic component of an exhaust gas purification system that uses a three-way catalyst is feedback control of air-fuel ratio by means of an $O_2$ sensor for the purpose of maximizing the emission purification efficiency characteristic with reference to the intake air-fuel ratio of the three-way catalyst.
Kubota engines have two kinds of catalytic devices, catalytic muffler and catalytic converter.

# 2. Vaporizer and lock off valve (WG1605-L-E3, WG1605-N, WG1605-GL-E3, WG1605-LN-E3, WG1605-GLN-E3)

Vaporizer requires a normally-closed electrically controlled fuel lock off valve that is close coupled to the vaporizer and off when ignition switch is off or when the engine is not running normally (supplied from Kubota). In operation without a lock off upstream the vaporizer will flow fuel with the engine off. The vaporizer is not a fuel shut-off safety device.

# 3. Length of the vapor hose (WG1605-L-E3, WG1605-N, WG1605-GL-E3, WG1605-LN-E3, WG1605-GLN-E3)

Vapor hose length must not exceed 700 mm (27.6 in), shorter is generally considered better. Care should be taken with hose routing and length to minimize the affect on vaporizer vibration isolation. The metal reinforced hose should not be used.

# 4. Important notice

These instructions are provided to the final engine assemblers (FEA) who must ensure the engine, exhaust system (catalyst), fuel system etc, are installed correctly in the engine's certified configuration.
Please make sure whether emission-related items are certain on application review. (for EPA only)
Failing to follow these instructions when installing a certified engine in a piece of non-road equipment violates federal law (40 CFR 1068.105(b)), subject to fines or other penalties as described in the clean air act.
The contractual agreement contract is necessary before mass-production.

# 5. Emission-related installation instructions

## 5.1 Exhaust system

Kubota supplies a certified catalyst. FEA must use a Kubota certified catalyst and assemble the exhaust system parts according to the instructions.
No other catalyst is certified for use with WG1605 engine. No other catalyst can be used.
FEA may only install the exhaust system parts confirmed at application review.

## 5.2 Intake system

To prevent decreases of engine output performance, intake resistance must be kept below a certain point.

## 5.3 Crankcase ventilation connections

Crankcase emissions may not be discharged directly into the ambient atmosphere throughout its useful life. (40 CFR 1048.115 (a))

## 5.4 Gasoline fuel system

If your equipment uses a volatile liquid fuel (such as gasoline), they must meet the evaporative emission standards of 40 CFR 1048.

## 5.5 Gaseous fuel system

FEA must use only the vaporizer and the lock off valve Kubota offers and assemble the LPG fuel system parts according to the instructions.

## 5.6 Engine control unit (ECU)

Installation must use all 4 of the vibration mounts.
ECU header pins must be horizontal or point downward.

## 5.7 Vehicle interface connectors

Vehicle interface connectors shall be connected with your wire harness.

## 5.8 Malfunction indicator light (MIL)

When the MIL goes on, it must display "Check engine", "Service engine soon", or a similar message that EPA approve. (40 CFR 1048.110 (b))

# ENGINE IDENTIFICATION

## 1. Engine model name, code number and engine serial number

When contacting the manufacture, always specify your engine model name, code number and serial number.
The engine model, code number and its serial number need to be identified before the engine can be serviced or parts replaced.

**Engine Model Name and Number Label**
The engine model name, the engine serial number and engine code number are written in this label.

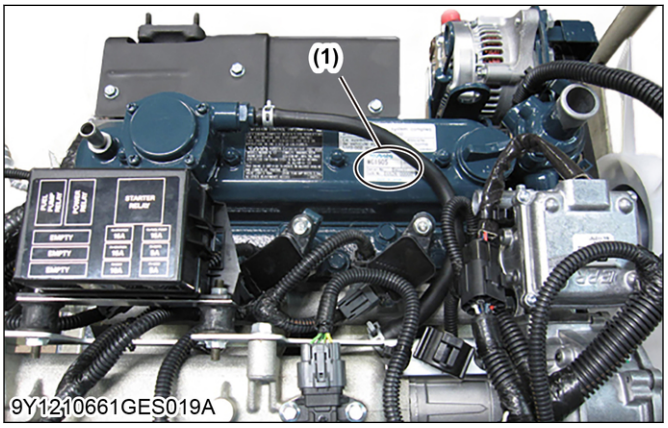


(1) Engine model name and number label

**Engine Serial Number**
The engine serial number is an identification number for the engine.
It is marked after the engine model name.

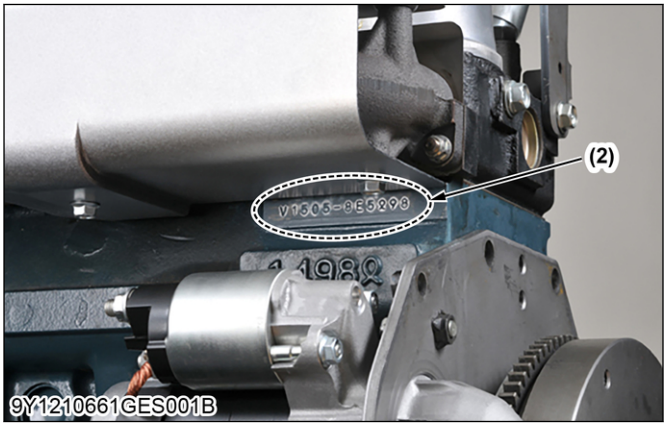


(2) Engine serial number

It indicates the engine series, the production year and month, and the lot number.

**Engine Series**

| Number or Alphabet | Series |
|---|---|
| 1 | 05 (include: WG) |
| 2 | V3 |
| 3 | 08 |
| 4 | SM (include: WG) |
| 5 | Air Cooled Gasoline |
| 6 | GZ, OC, AC, EA, E |
| 7 | 03 (include: WG) |
| 8 | 07 |
| A | EA, RK |
| B | 03 (KET Production) |

# 2. E3 engine

[A]

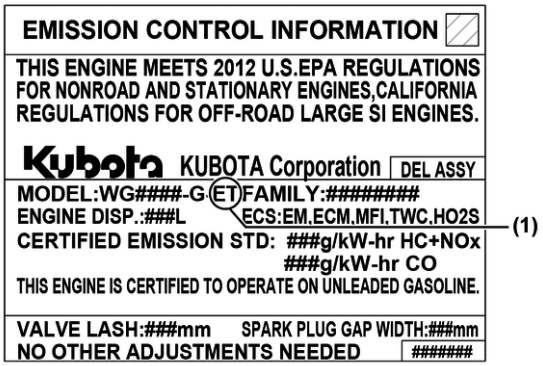


9Y1210661GES012B

[B]




9Y1210661GES013B

[C]

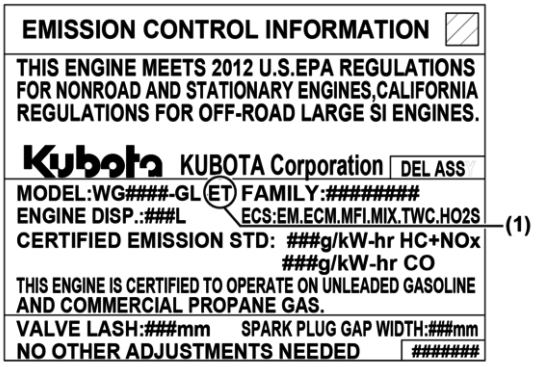


9Y1210661GES014B

[D]

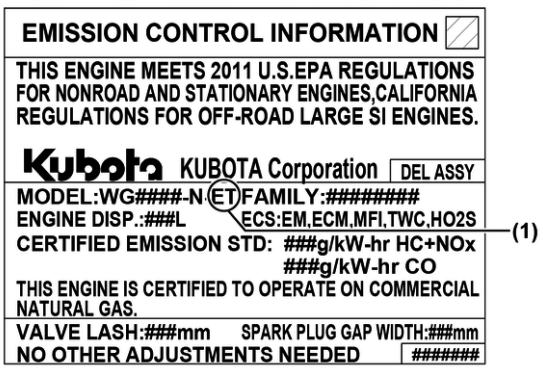


9Y1210661GES023A

[E]

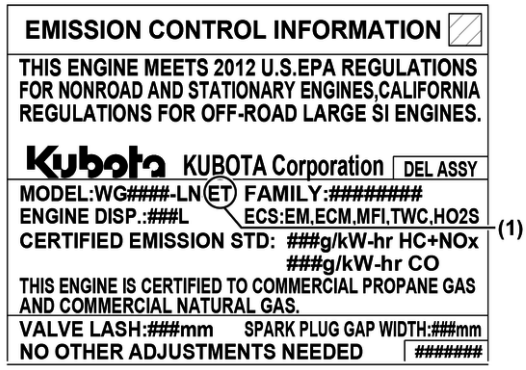


9Y1210661GES024A

[F]




9Y1210661GES025A

(1) *"E3"* engines are identified with **[ET]** at the end of the model designation, on the US EPA label. *"E3"* designates phase 3 / tier 3 models, depending on engine displacement and output classification.

[A] WG1605-G-E3
[B] WG1605-L-E3
[C] WG1605-GL-E3
[D] WG1605-N-E3
[E] WG1605-LN-E3
[F] WG1605-GLN-E3

The emission controls previously implemented in various countries to prevent air pollution will be stepped up as non-road emission standards continue to change. The timing or applicable date of the specific non-road emission regulations depends on the engine displacement and output classification.

Over the past several years, Kubota has been supplying SI engines that comply with regulations in the respective countries affected by non-road emission regulations. For Kubota engines, E3 will be the designation that identifies engine models affected by the next emission phase (See the table).

| Category (1) | Displacement and Output classification | EPA regulation |
|---|---|---|
| ET | Label / Family name: #KBXB####### | Phase 3 |

When servicing or repairing ###-E3 series engines, use only replacement parts for that specific E3 engine, designated by the appropriate E3 Kubota parts list and perform all maintenance services listed in the appropriate Kubota operator's manual or in the appropriate E3 Kubota workshop manual. Use of

# 5. Check points of every 200 hours

## 5.1 Changing engine oil

**CAUTION**
- **Be sure to stop engine before changing engine oil.**

**IMPORTANT**
- **When using an oil of different maker or viscosity from the previous one, remove all of the old oil.**
- **Never mix two different types of oil.**
- **Engine oil should have properties of API classification better than SH.**
- **Use the proper SAE engine oil according to ambient temperature.**

| | |
|---|---|
| Above 25 ℃ (77 ℉) | SAE30 or SAE10W-30 or SAE15W-40 |
| 0 ℃ to 25 ℃ (32 ℉ to 77 ℉) | SAE20 or SAE10W-30 |
| 0 ℃ to -20 ℃ (32 ℉ to -4 ℉) | SAE10W or SAE10W-30 |

1. Start and warm up the engine for approx. 5 minutes.
2. Place an oil pan underneath the engine.
3. To drain the used oil, remove the drain plug (1) at the bottom of the engine and drain the oil completely.

| | |
|---|---|
| Engine oil capacity | 6.0 L<br>1.6 U.S. gals |

4. Screw the drain plug (1).
5. Fill new oil up to upper line on the dipstick (2).

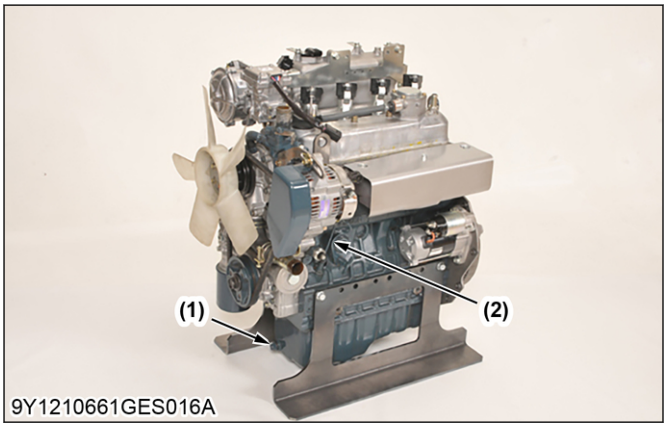


(1) Drain plug (2) Dipstick

| | | |
|---|---|---|
| Tightening torque | Drain plug | 32.4 to 37.3 N·m<br>3.31 to 3.80 kgf·m<br>23.9 to 27.5 lbf·ft |

## 5.2 Replacing oil filter cartridge

**CAUTION**
- **Be sure to stop the engine before changing the oil filter cartridge.**

**IMPORTANT**
- **To prevent serious damage to the engine, replacement element must be highly efficient. Use only a Kubota genuine filter or its equivalent.**

1. Remove the engine oil filter cartridge (1) with the filter wrench.

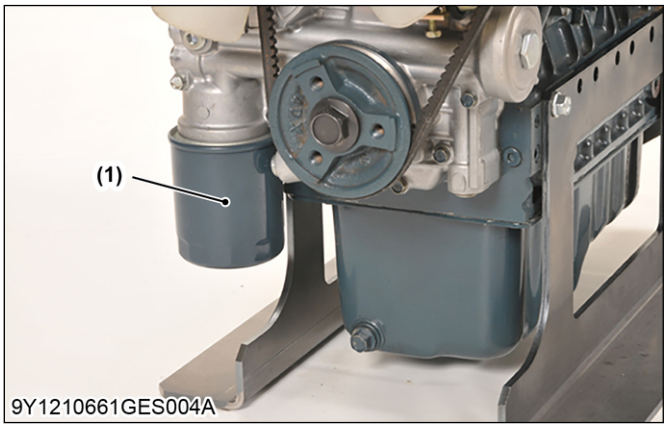


(1) Engine oil filter cartridge

2. Apply a slight coat of oil onto the new cartridge gasket.
3. To install the new cartridge, screw it in by hand. Over tightening may cause deformation of rubber gasket.
4. After the new cartridge has been replaced, the engine oil normally decrease a little. Thus see that the engine oil does not leak through the seal and be sure to read the oil level on the dipstick. Then, fill the engine oil up to the specified level.

## 5.3 Checking LPG / natural gas tank setting condition

WG1605-L-E3,WG1605-N-E3, WG1605-GL-E3, WG1605-LN-E3, WG1605-GLN-E3

1. Check the setting condition of LPG / natural gas fuel tank.

## 5.4 Checking radiator hoses and clamp bands

1. Check to see if the radiator hoses are properly fixed every 200 hours of operation or every six months, whichever comes first.

# SPECIAL TOOLS

## 1. Compression tester

Use to measure gasoline engine compression and diagnose the engine for a major overhaul.

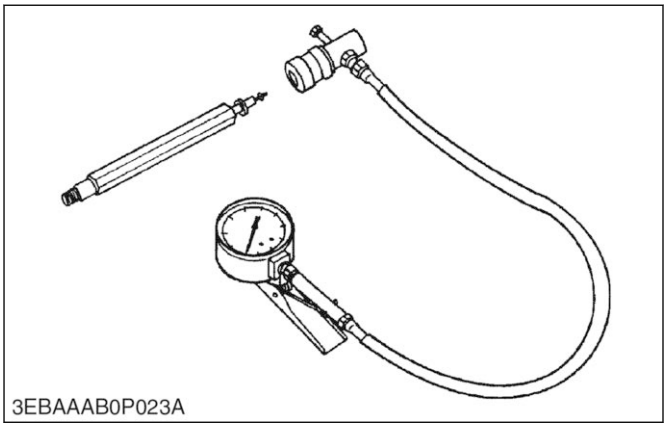
3EBAAAB0P023A

**Code No.**
07909-30251

## 2. Oil pressure tester

Use to measure lubricating oil pressure.

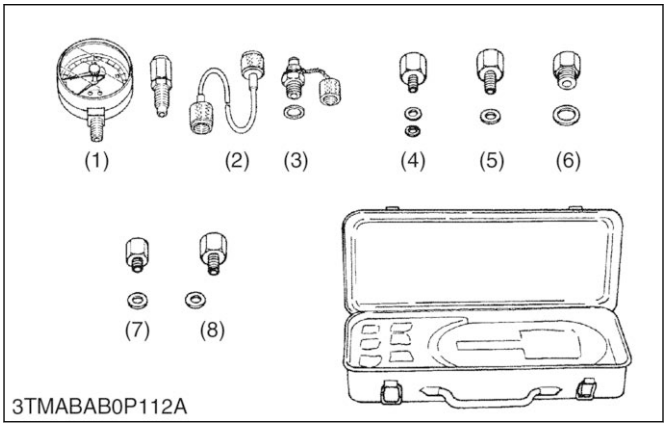

3TMABAB0P112A

(1) Gauge
(2) Cable
(3) Threaded joint
(4) Adaptor 1
(5) Adaptor 2
(6) Adaptor 3
(7) Adaptor 4
(8) Adaptor 5

**Code No.**
07916-32032

## 3. Pressure gauge

Check the pressure of vaporizer.

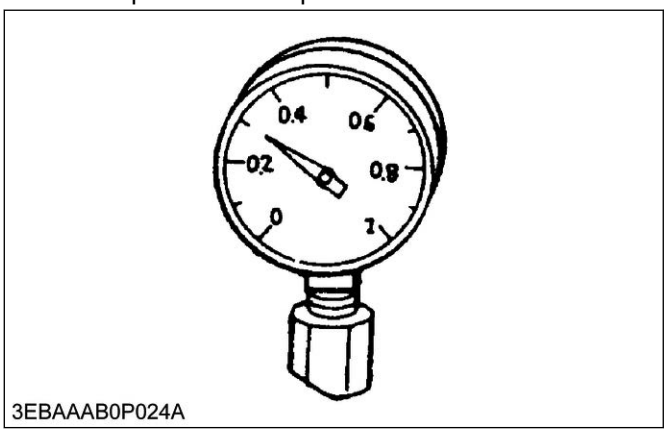

3EBAAAB0P024A

**Specification**
1745 kPa (17.79 kgf/cm$^2$, 253.1 psi)

## 4. Valve guide replacing tool

Use for press out or press fit the valve guide.

**NOTE**
- **This special tool is not provided, so make it by referring to the figure.**

| | |
|---|---|
| A | **C1:**<br>Chamfer 1.0 mm (0.039 in.) |
| B | 73.90 to 74.00 mm dia. (2.910 to 2.913 in. dia.) |
| C | 69.80 to 69.90 mm dia. (2.748 to 2.751 in. dia.) |
| D | 30 mm dia. (1.2 in. dia.) |
| E | **C2:**<br>Chamfer 2.0 mm (0.079 in.) |
| F | 18 mm (0.71 in.) |
| G | 150 mm (5.91 in.) |
| H | 188 mm (7.40 in.) |

# 9. Crank sleeve setter

Use to fix the crankshaft sleeve.

**NOTE**

- **The special tools are not provided, so make them referring to the figure.**

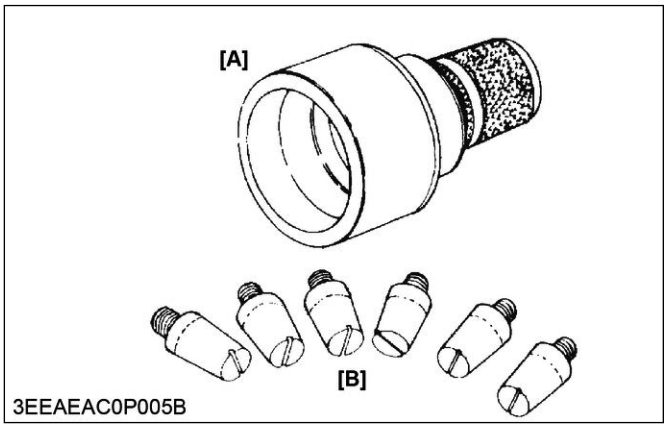

3EEAEAC0P005B

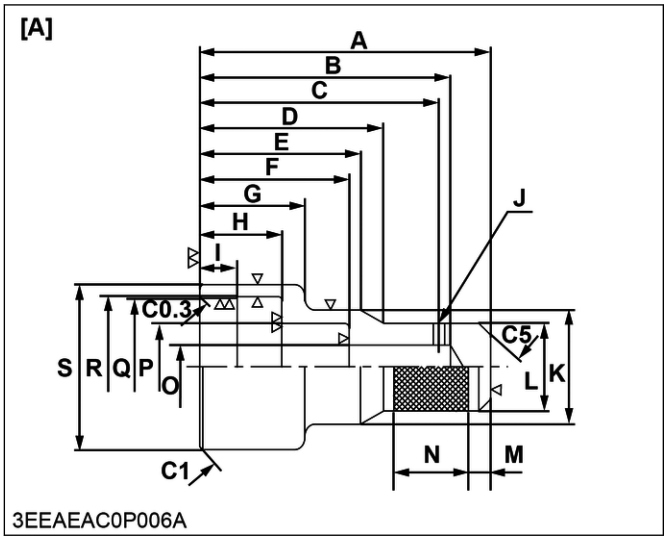

3EEAEAC0P006A

**[A] Auxiliary socket for pushing**

| | |
|---|---|
| A | 130 mm (5.12 in.) |

(Continued)

| | |
|---|---|
| B | 112 mm (4.41 in.) |
| C | 107 mm (4.21 in.) |
| D | 82 mm (3.2 in.) |
| E | 72 mm (2.8 in.) |
| F | 67 mm (2.6 in.) |
| G | 47 mm (1.8 in.) |
| H | 36.00 to 36.20 mm (1.418 to 1.425 in.) |
| I | 17 mm (0.67 in.) |
| J | 5.0 mm dia. (0.20 in. dia.) |
| K | 52 mm dia. (2.0 in. dia.) |
| L | 40 mm dia. (1.6 in. dia.) |
| M | 10 mm (0.39 in.) |
| N | 33 mm (1.3 in.) |
| O | 20 mm dia. (0.79 in. dia.) |
| P | 40 mm dia. (1.6 in. dia.) |
| Q | 72.10 to 72.15 mm dia. (2.839 to 2.840 in. dia.) |
| R | 73 mm dia. (2.9 in. dia.) |
| S | 83 mm dia. (3.3 in. dia.) |
| C0.3 | Chamfer 0.30 mm (0.012 in.) |
| C1 | Chamfer 1.0 mm (0.039 in.) |
| C5 | Chamfer 5.0 mm (0.20 in.) |

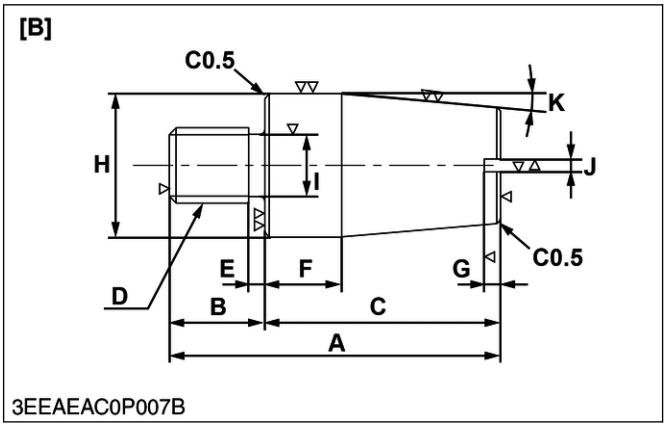

3EEAEAC0P007B

**[B] Sleeve guide**

| | |
|---|---|
| A | 42 mm (1.7 in.) |
| B | 12 mm (0.47 in.) |
| C | 30 mm (1.2 in.) |
| D | M10 × Pitch 1.25 |
| E | 2.0 mm (0.079 in.) |
| F | 10 mm (0.39 in.) |
| G | 2.0 mm (0.079 in.) |

(Continued)

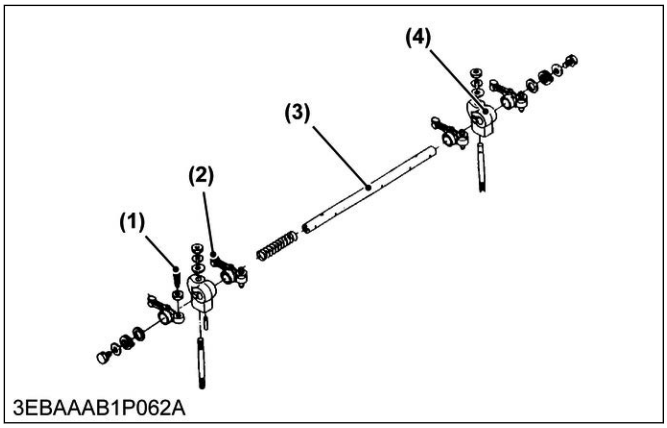


(1) Adjusting screw
(2) Rocker arm
(3) Rocker arm shaft
(4) Rocker arm bracket

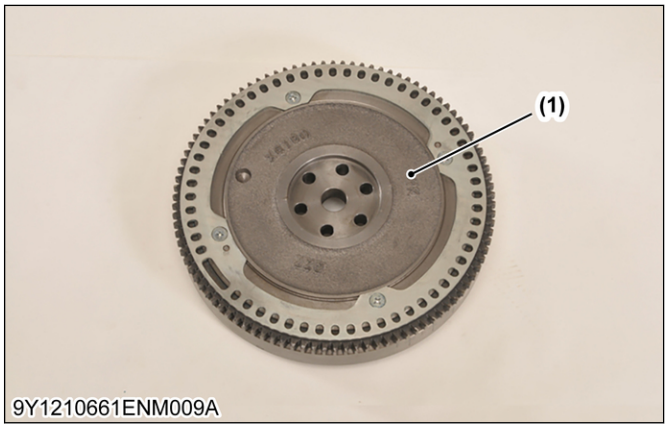


(1) Flywheel

## 1.12 Inlet and exhaust valves

The valve and its guide for the inlet are different from those for the exhaust.
Other parts, such as the spring (4), spring retainer (3), collet (2), stem seal (5), and cap (1) are the same for both the inlet and exhaust.

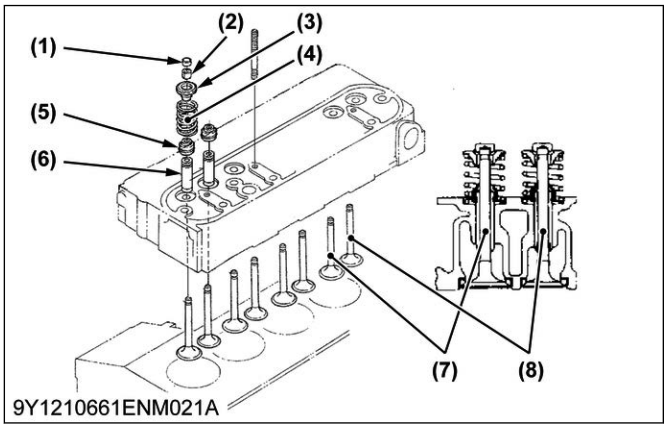


(1) Valve cap
(2) Collet
(3) Spring retainer
(4) Spring
(5) Stem seal
(6) Valve guide
(7) Inlet valve
(8) Exhaust valve

## 1.13 Flywheel

The flywheel (1) is connected with the crankshaft, it stores the rotating force in the combustion stroke as inertial energy to rotate the crankshaft smoothly.
The flywheel periphery is provided with marks showing fuel injection timing and top dead center.
The flywheel has gear teeth around its outer rim, which mesh with the drive pinion of the starter. Also, a rotor for determining the ignition timing is attached to the flywheel.

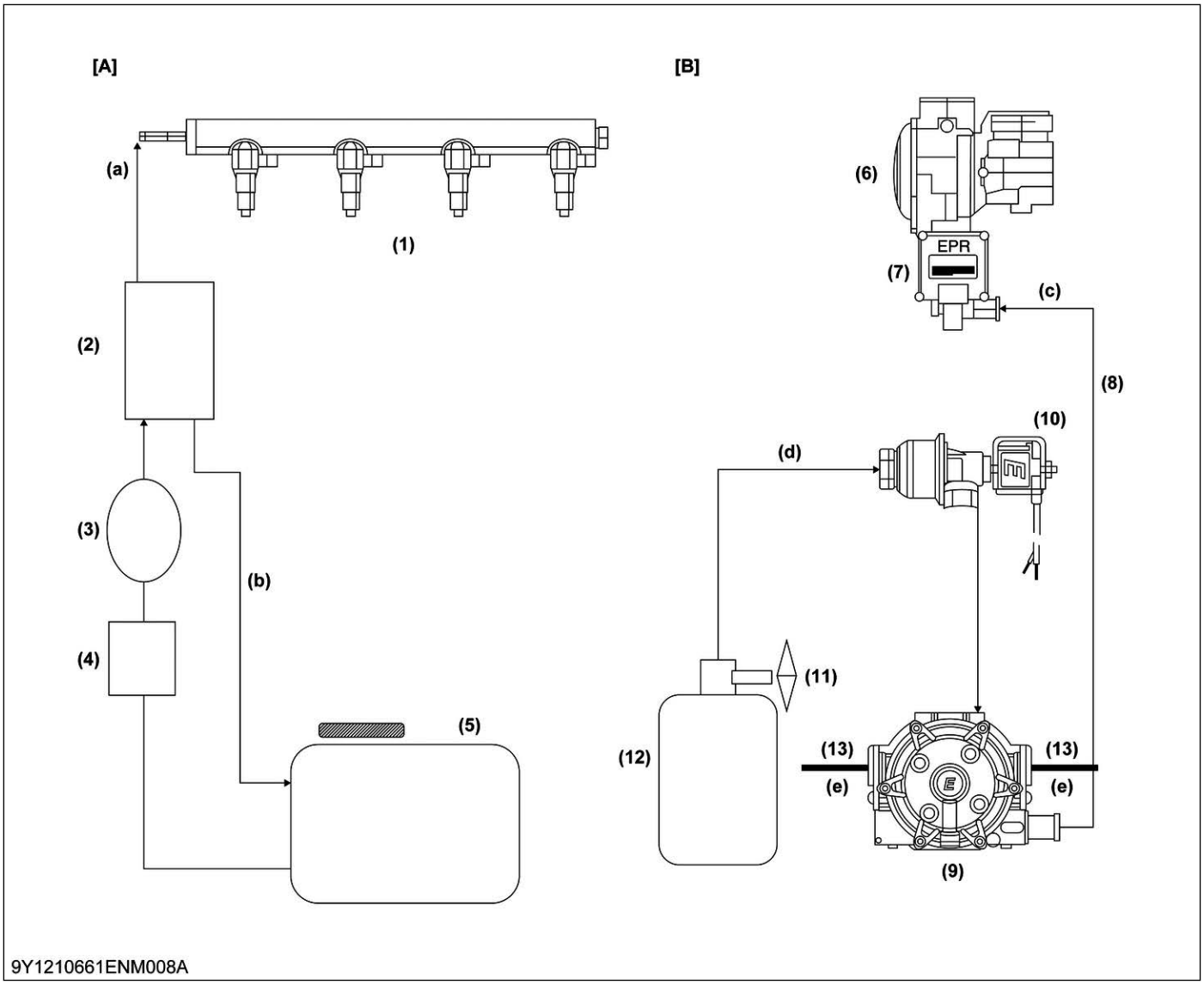


(1) Delivery pipe
(2) Fuel pressure manifold (FPM)
(3) Fuel pump
(4) Fuel filter
(5) Gasoline tank*
(6) Mixer
(7) Regulator (D-EPR)
(8) Vapor hose*
(9) Vaporizer (DSR)
(10) Lock off valve
(11) LPG/natural gas manual valve*
(12) LPG/natural gas tank*
(13) Coolant hose*

[A] Gasoline fuel
[B] LPG/natural gas fuel
(a) Gasoline line*
(b) Bleed/return circuit*
(c) Gaseous propane or natural gas line*
(d) Liquid propane or natural gas line*
(e) Hot coolant inlet or outlet line*

* Component Marked * is Not Provided by KUBOTA

## 4.2 Fuel filter (WG1605-G-E3, WG1605-GL-E3, WG1605-GLN-E3)

The fuel filter is installed in the fuel line between the fuel tank and the feed pump.
As the fuel flows from the inlet *"A"* through the filter element (1), the dirt and impurities in the fuel are filtered, allowing only clean fuel to penetrate the inside of the filter element. The cleaned fuel flows out from the outlet *"B"*.

| | |
|---|---|
| Type of filter element | Accordion-pleated paper type |
| Material of filter element | Cotton fiber |
| Filter mesh | 15 µm (0.00059 nin.) |

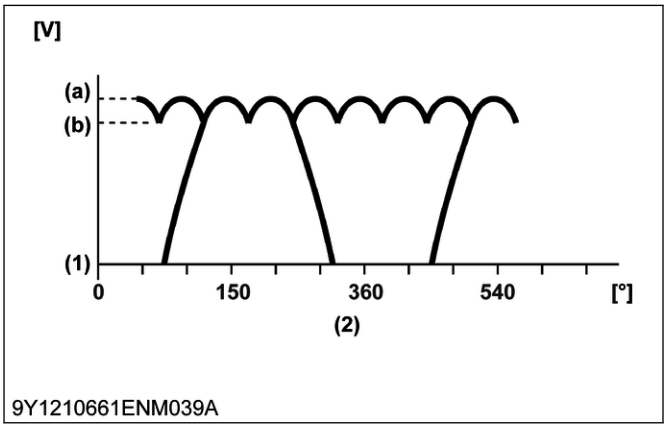


(1) Voltage
(2) Angle of rotation (°)
(a) VH max
(b) VH min

### 6.2.2.6 Load connected to the P terminal

**NOTE**

- **Ensure that there is no load short circuit or wrong wiring.**
- **Do not connect inductive or capacitive load (connection of such load subject to discussion of the specification).**
- **When detecting a waveform, take the noise and VHmin into consideration.**
- **Take the surge voltage into consideration for the input of the load.**
- **Use the actual equipment for sufficient check of the operation of the load.**

P terminal output current: 0.5 A max (average current).

### 6.2.3 Engine control unit (ECU)

The ECU will use signal inputs, from the engine sensors, to control the fuel metering and speed control, while the engine is running. As well, the ECU will provide diagnostic control, over the fuel system.

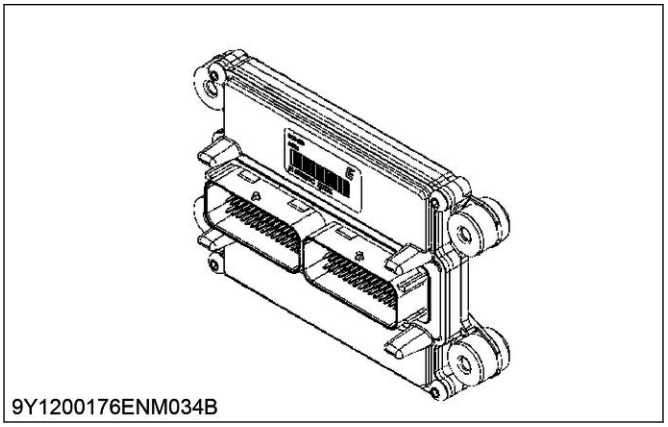


### 6.2.4 Water temperature sensor

Ignition timing, fuel rate, and boost levels can be configured to vary with engine coolant temperature. This is typically done at very cold or very hot conditions. Coolant temperature is also used in the airflow models in the ECU.

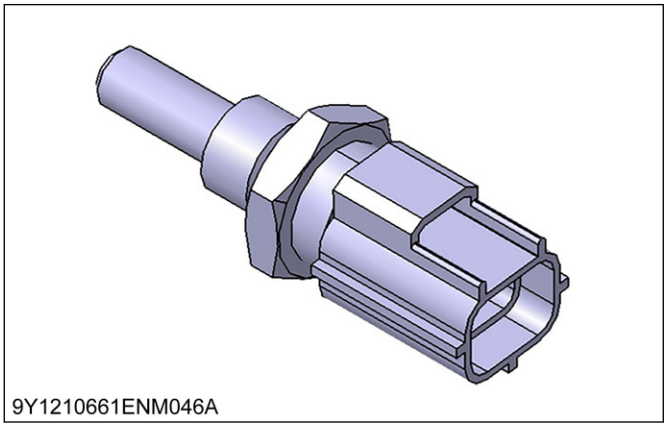


### 6.2.5 Temperature and manifold absolute pressure sensor (Tmap sensor)

Tmap sensor is mounted in the intake manifold and measures the absolute pressure as well as the temperature of the air / fuel stream. map data is used by the ECU for calculating airflow pressure. The temperature information from the tmap is used for a density correction in the mass air flow calculation.

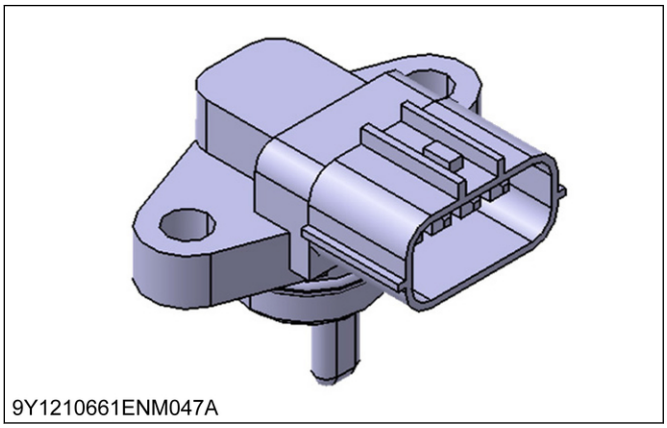


### 6.2.6 Crankshaft position sensor

The Crankshaft Position Sensor provides engine speed information.

## 3.2 Tightening torques for general use screws, bolts

If the tightening torque is not specified, refer to the table below for the none specified torques values.

| Indication on top of bolt | 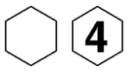 [No-grade or 4T] | | |
|---|---|---|---|
| **Unit** | **N·m** | **kgf·m** | **lbf·ft** |
| M6 | 7.9 to 9.3 | 0.80 to 0.95 | 5.8 to 6.8 |
| M8 | 18 to 20 | 1.8 to 2.1 | 13 to 15 |
| M10 | 40 to 45 | 4.0 to 4.6 | 29 to 33 |
| M12 | 63 to 72 | 6.4 to 7.4 | 47 to 53 |

| Indication on top of bolt |  [7T] | | |
|---|---|---|---|
| **Unit** | **N·m** | **kgf·m** | **lbf·ft** |
| M6 | 9.81 to 11.2 | 1.00 to 1.15 | 7.24 to 8.31 |
| M8 | 24 to 27 | 2.4 to 2.8 | 18 to 20 |
| M10 | 49 to 55 | 5.0 to 5.7 | 37 to 41 |
| M12 | 78 to 90 | 7.9 to 9.2 | 58 to 66 |

| Indication on top of nut | 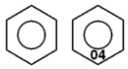 No-grade or 4T | | |
|---|---|---|---|
| **Unit** | **N·m** | **kgf·m** | **lbf·ft** |
| M6 | 9.80 to 11.3 | 1.00 to 1.15 | 7.23 to 8.33 |
| M8 | 23.5 to 27.5 | 2.40 to 2.80 | 17.4 to 20.2 |
| M10 | 49.0 to 55.9 | 5.00 to 5.70 | 36.2 to 41.2 |
| M12 | 77.5 to 90.2 | 7.91 to 9.19 | 57.2 to 66.5 |

### 4.2.2.3 Removing vapor hose and coolant hose (WG1605-N-E3, WG1605-GL-E3, WG1605-LN-E3, WG1605-GLN-E3)

**⚠ CAUTION**

- **Close the LPG/natural gas tank valve.**
- **In order to reduce the fuel pressure, do not remove the fuel hose at least 3 minutes after stopping the engine.**
- **Vent the air of the water passage of vaporizer (3) after removing the coolant hose (1), (2).**

**■ IMPORTANT**

- **When disassembling the fuel system, make sure that the LPG/natural gas tank valve is closed.**

1. Disconnect the vapor hose (4).

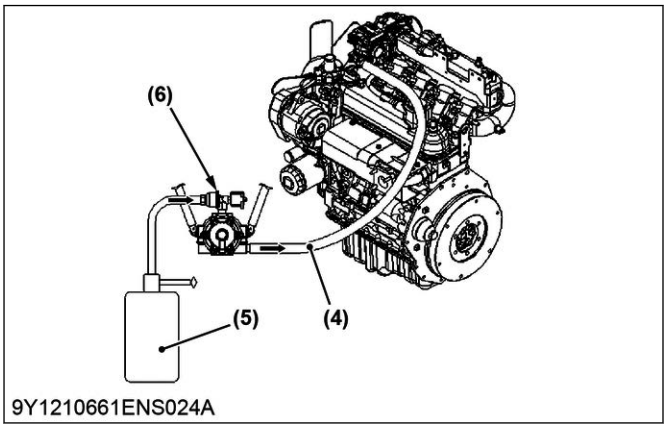


(4) Vapor hose
(5) LPG/natural gas tank
(6) Lock off valve

2. After drain the coolant, disconnect the coolant hose (1), (2).
3. Remove the vaporizer (3) (if necessary).

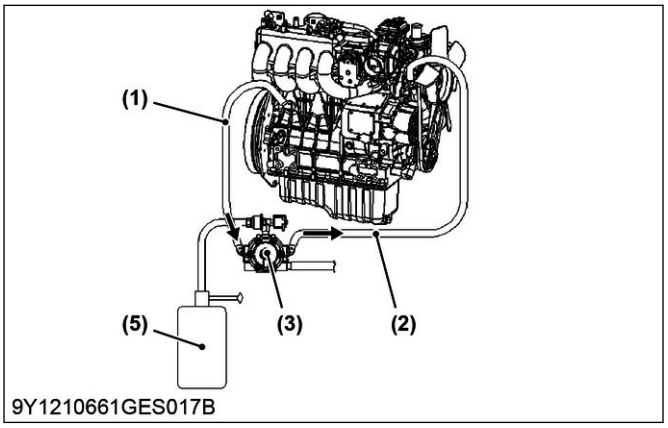


(1) Coolant hose
(2) Coolant hose
(3) Vaporizer
(5) LPG/natural gas tank

**(When reassembling)**

- Bleed the vaporizer after supplying coolant.

### 4.2.2.4 Removing ignition coil and spark plug

1. Disconnect the ignition coil connector (2).
2. Remove the ignition coil (1).

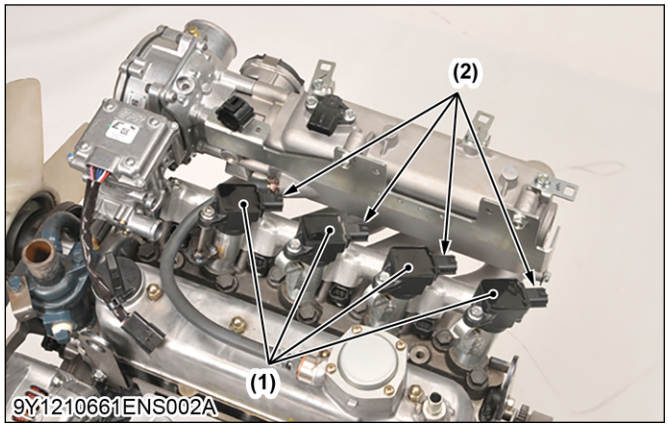


(1) Ignition coil
(2) Ignition coil connector

3. Remove the spark plug (3).

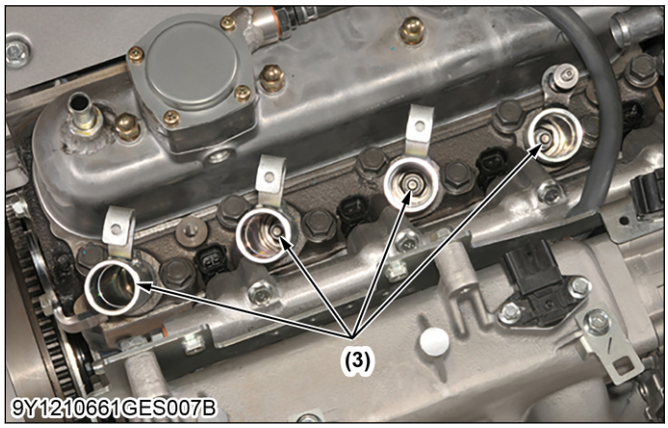


(3) Spark plug

**(When reassembling)**

**■ NOTE**

- **Put the ignition coil inside the spark plug terminal firmly.**
- **Make sure that the wiring and the ignition coil are correctly connected.**
- **Make sure that the removed connectors are correctly connected.**
- **Fix the ignition coil by screw / nut.**

- Tighten the spark plug with a plug wrench.
- Tighten to the specified tightening torque.

| | | |
|---|---|---|
| Tightening torque | Spark plug | 24.5 to 29.4 N·m<br>2.50 to 2.99 kgf·m<br>18.1 to 21.5 lbf·ft |
| | Ignition coil mounting screw / nut | 9.81 to 11.3 N·m<br>1.00 to 1.15 kgf·m<br>7.24 to 8.33 lbf·ft |

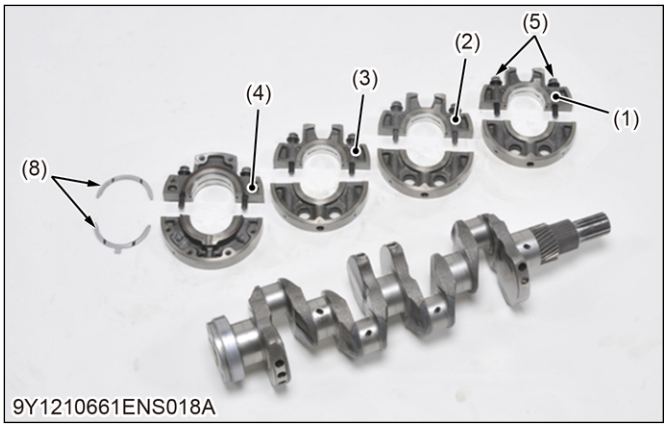


(1) Main bearing case assembly 1
(2) Main bearing case assembly 2
(3) Main bearing case assembly 3
(4) Main bearing case assembly
(5) Main bearing case screw 1
(8) Thrust bearing

- Make sure that the main bearing case moves smoothly after tightening the main bearing case screw 1 (5) to the specified torque.
- Tighten to the specified tightening torque.

| | | |
|---|---|---|
| Tightening torque | Main bearing case screw 1 | 29.4 to 34.3 N·m<br>3.00 to 3.49 kgf·m<br>21.7 to 25.2 lbf·ft |

## 4.2.8 Removing starter

**■ NOTE**

- **Do not damage to the brush and commutator.**

1. Remove the C terminal nut (7), and disconnect the connecting lead (12).
2. Remove the solenoid switch mounting nuts (1), then the solenoid switch (5).
3. Remove the end frame cap (17).
4. Remove the brake shoe (16), brake spring (15) and gasket (14).
5. Remove the through bolts (22), then the rear end frame (13).
6. Remove the brush from the brush holder while holding the spring up.
7. Remove the brush holder (21).
8. Draw out the yoke (19) from the starter drive housing (2).