Service Manual: CIRCUIT TESTING PROCEDURES -
NON-DTC-BASED DIAGNOSTICS

WARNING > GENERAL WARNINGS

WARNINGS provide information to prevent personal injury and vehicle damage. Below is a list of general warnings that should be followed any time a vehicle is being serviced.

WARNING:

Always wear safety glasses for eye protection.

WARNING:

Use safety stands anytime a procedure requires being under a vehicle.

WARNING:

Be sure that the ignition switch is always in the off position, unless the procedure requires it to be on.

WARNING:

Set the parking brake when working on any vehicle. An automatic transmission should be in park. A manual transmission should be in neutral.

WARNING:

Operate the engine only in a well-ventilated area.

WARNING:

Keep away from moving parts when the engine is running, especially the fan and belts.

WARNING:

To prevent serious burns, avoid contact with hot parts such as the radiator, exhaust

Fig 1: Radio & Antenna Connector

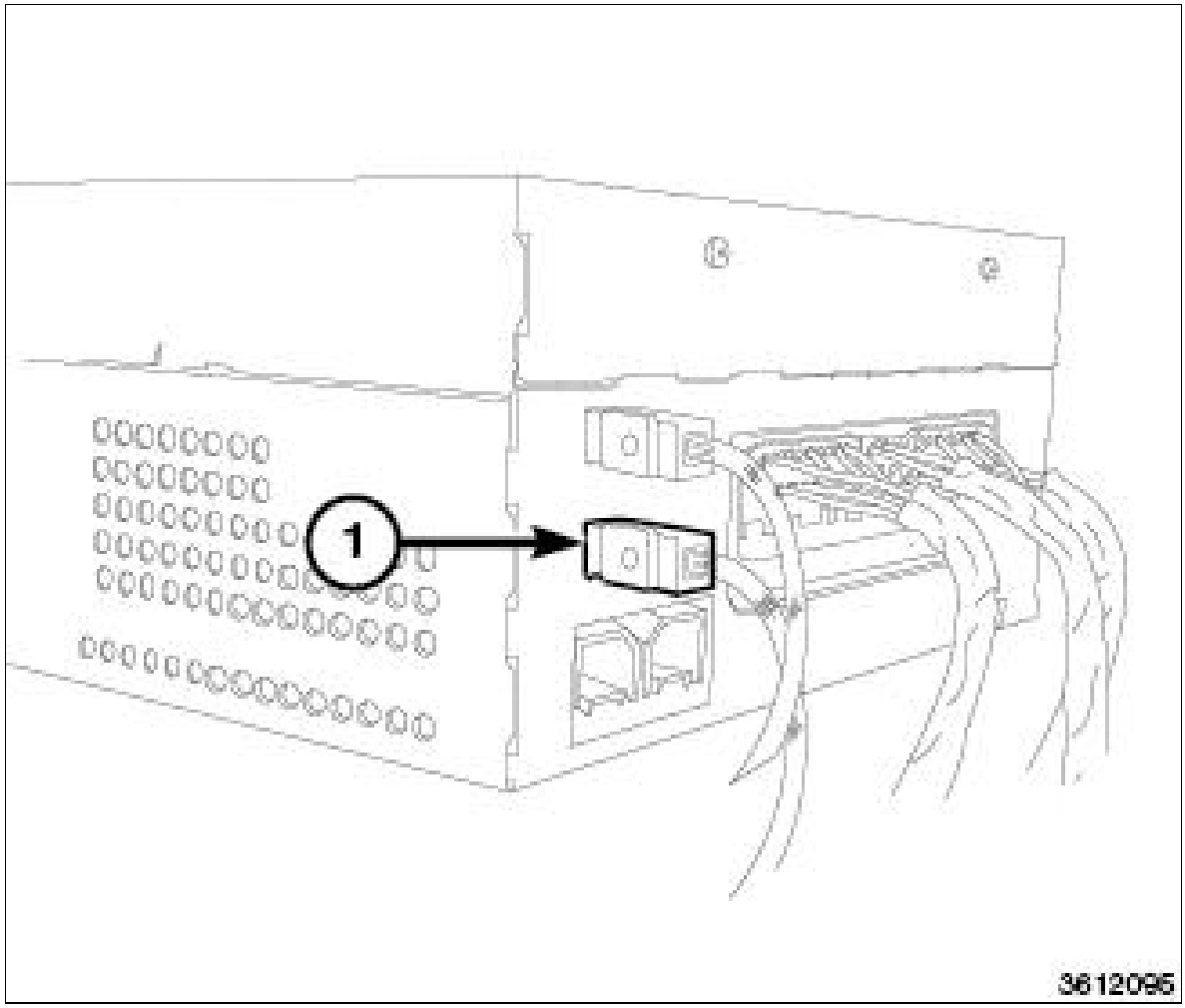

Courtesy of CHRYSLER GROUP, LLC

1. Connect the (special tool #9977-6-SAT, Antenna) (1) to the Radio C7 component connector.
2. Place the test antenna base on the roof of the vehicle.
3. Turn the ignition on.
4. Drive the vehicle outside to an un-obstructed area.
5. Turn the Satellite Radio on and select several different known good stations.

   Is the reception still poor or not available?

   Yes

   1. Replace the Radio in accordance with the Service Information.
   2. Perform the BODY VERIFICATION TEST. Refer to STANDARD PROCEDURE .

   No

   1. Go To Step 3

Fig 4: Checking Can Interior Bus (125K) Circuits For An Open

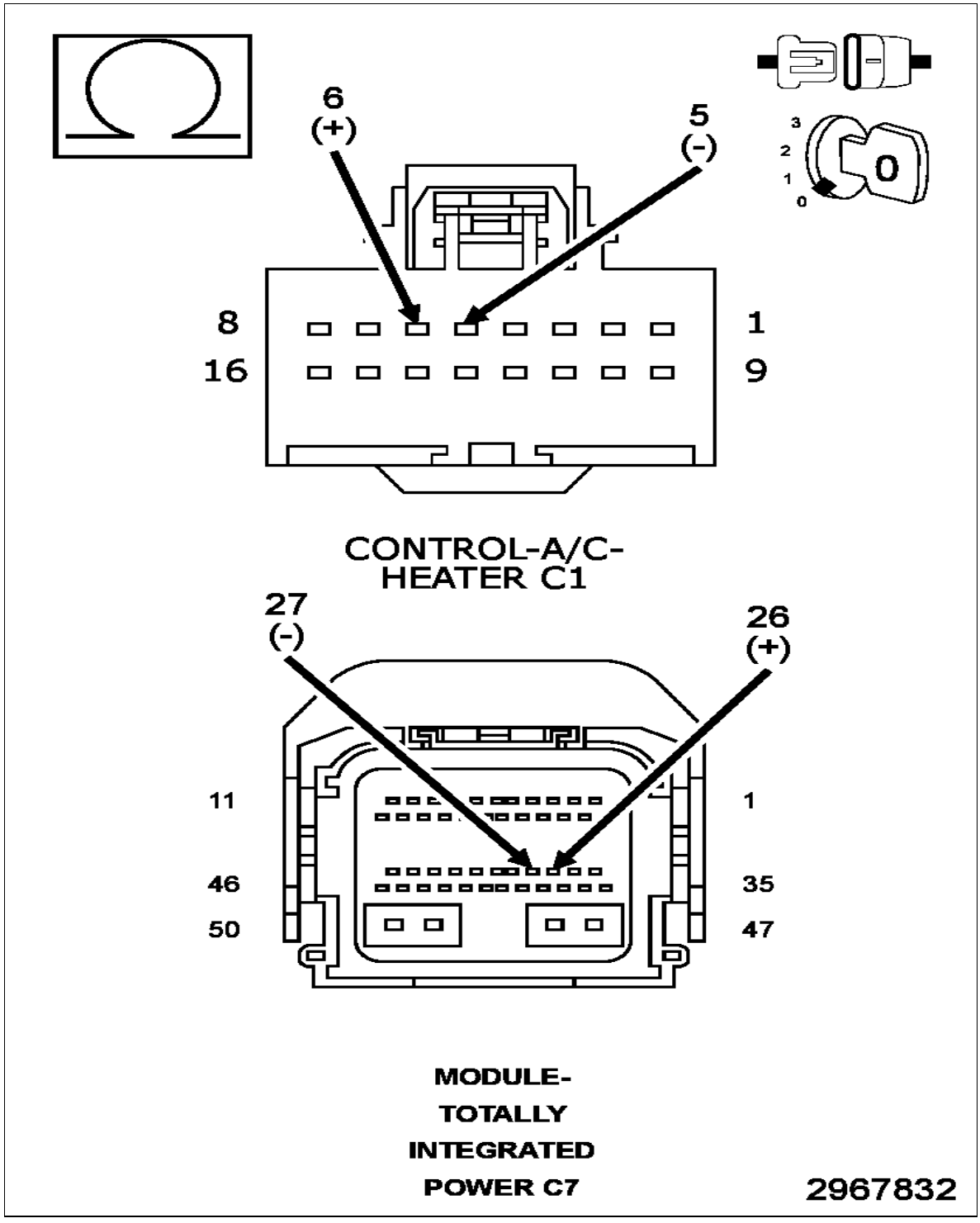

Courtesy of CHRYSLER GROUP, LLC

1. Disconnect the TIPM C7 harness connector.
2. Measure the resistance of the (D264) CAN Interior Bus (-) (125K) circuit between the TIPM C7 harness connector and the A/C Heater Control Module C1 harness connector.
3. Measure the resistance of the (D265) CAN Interior Bus (+) (125K) circuit between

Fig 2: RESET Push Button

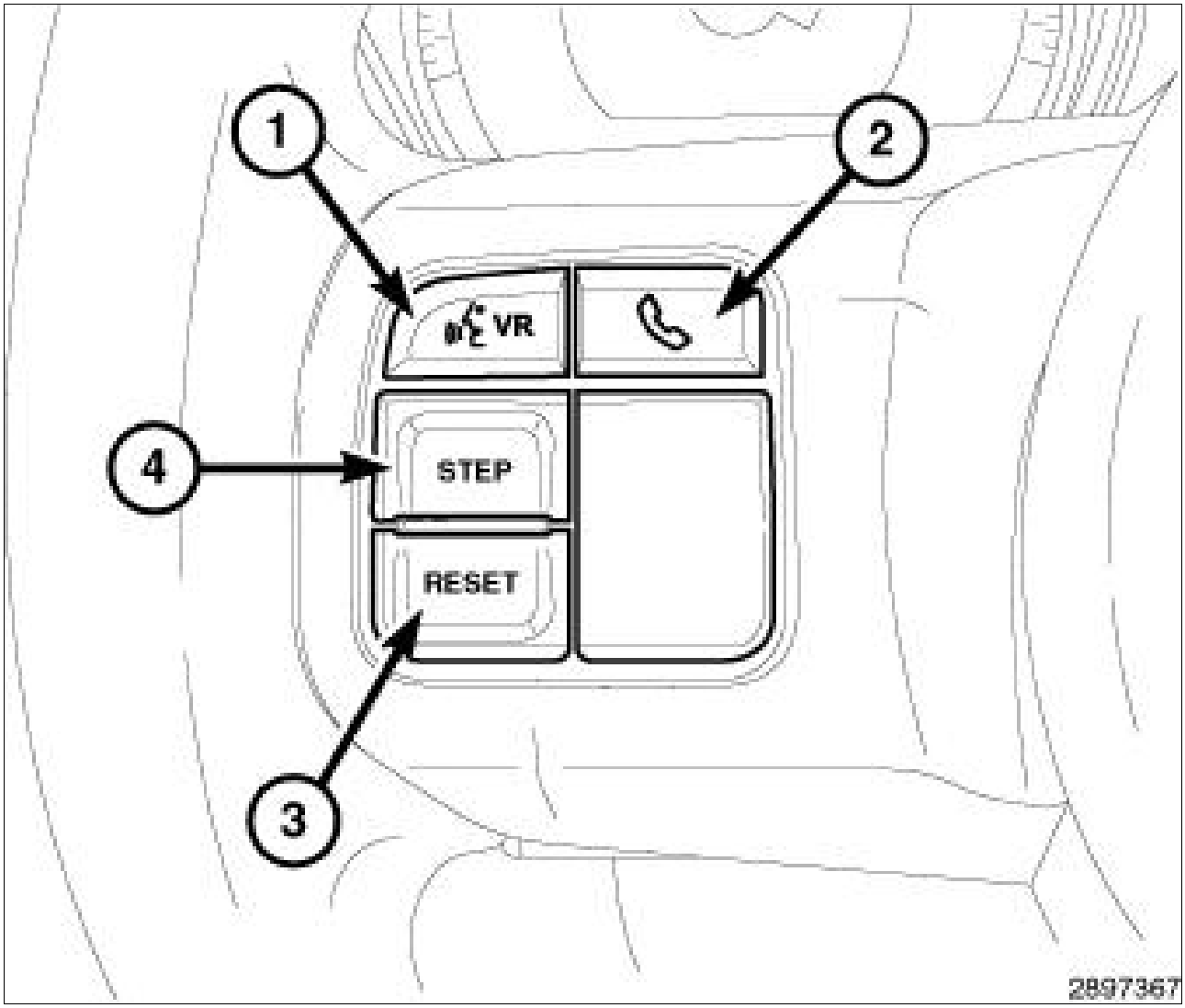

Courtesy of CHRYSLER GROUP, LLC

In vehicles not equipped with the optional Electronic Vehicle Information Center (EVIC), there are two methods for initiating compass calibration. The compass calibration can be initiated by depressing the odometer/trip odometer push button (24) located on the instrument cluster face just below, and to the right of the odometer; or, by using the RESET push button (3) in the EVIC switch pod (also known as the odometer switch pod) located in the left horizontal spoke of the steering wheel.

Manually calibrate the compass as follows:

NOTE:

Do not attempt to calibrate the compass near large metal objects such as other vehicles, large buildings, or bridges; or, near overhead or underground power lines.

1. Start the engine but leave the manual transmission in the Neutral (**N**) position or the automatic transmission in the Park (**P**) position.

Fig 1: Identifying Mounting Latch Bracket Components

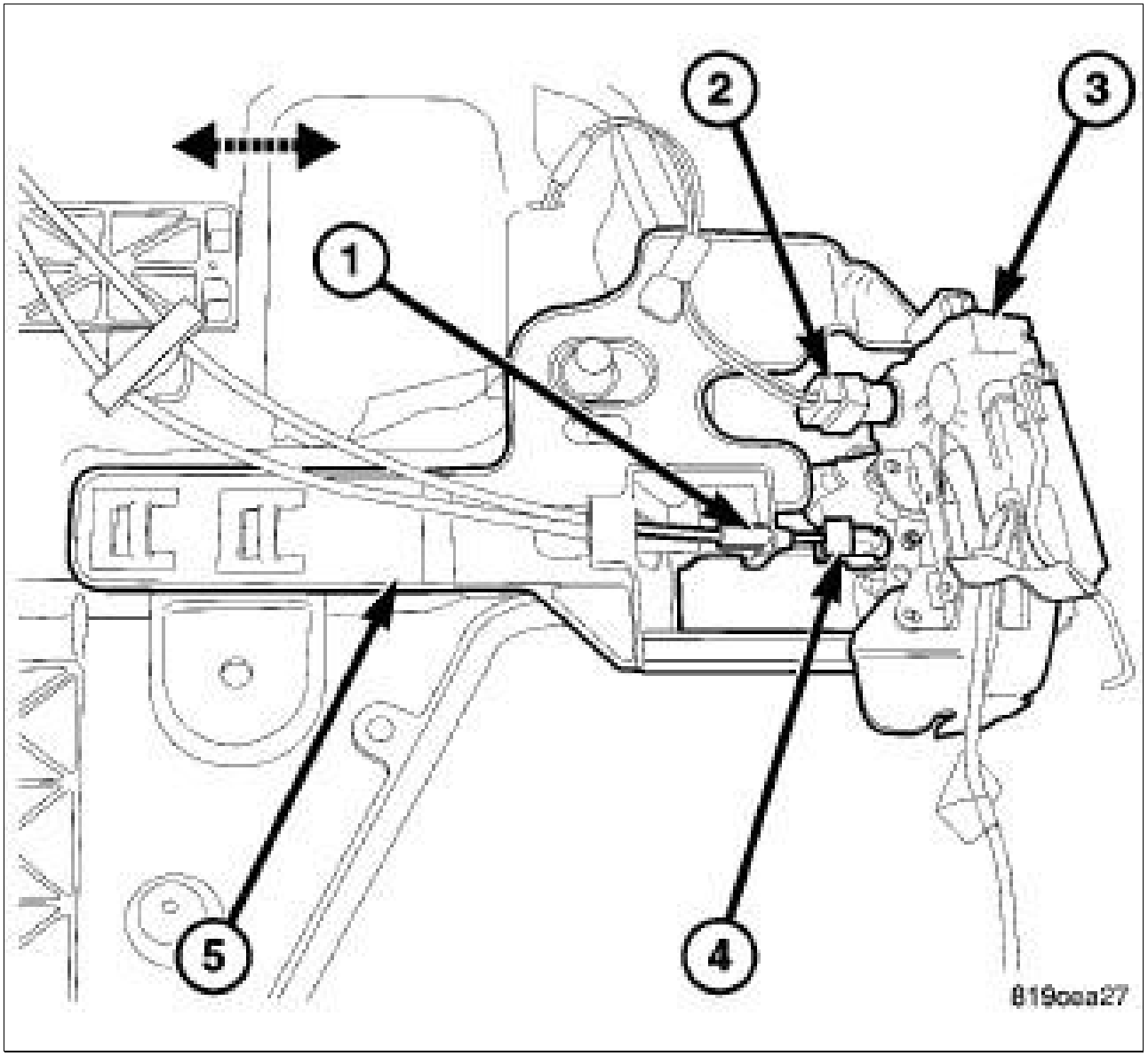

Courtesy of CHRYSLER GROUP, LLC

NOTE:

Front door shown, rear door similar.

1. Remove the latch (3), Refer to LATCH, DOOR, REMOVAL or LATCH, DOOR, REMOVAL .
2. Slide the latch bracket (5) off of the carrier plate tabs and remove.

DOORS - REAR, FULL > BRACKET, DOOR LATCH > INSTALLATION > INSTALLATION

2. Using a (special tool #C-4755, Trim Stick) remove the foam patches (1) covering the soft top fabric retainer (2) and tension cable flag
3. Remove the fasteners that hold the fabric retainer (2) and tension cable flag to the lower plastic header panel (3).

   Fig 2: Lower Header Panel Fasteners, Lower Header Panel, Fabric Retainer and Tension Cable Flag & Frame Tube

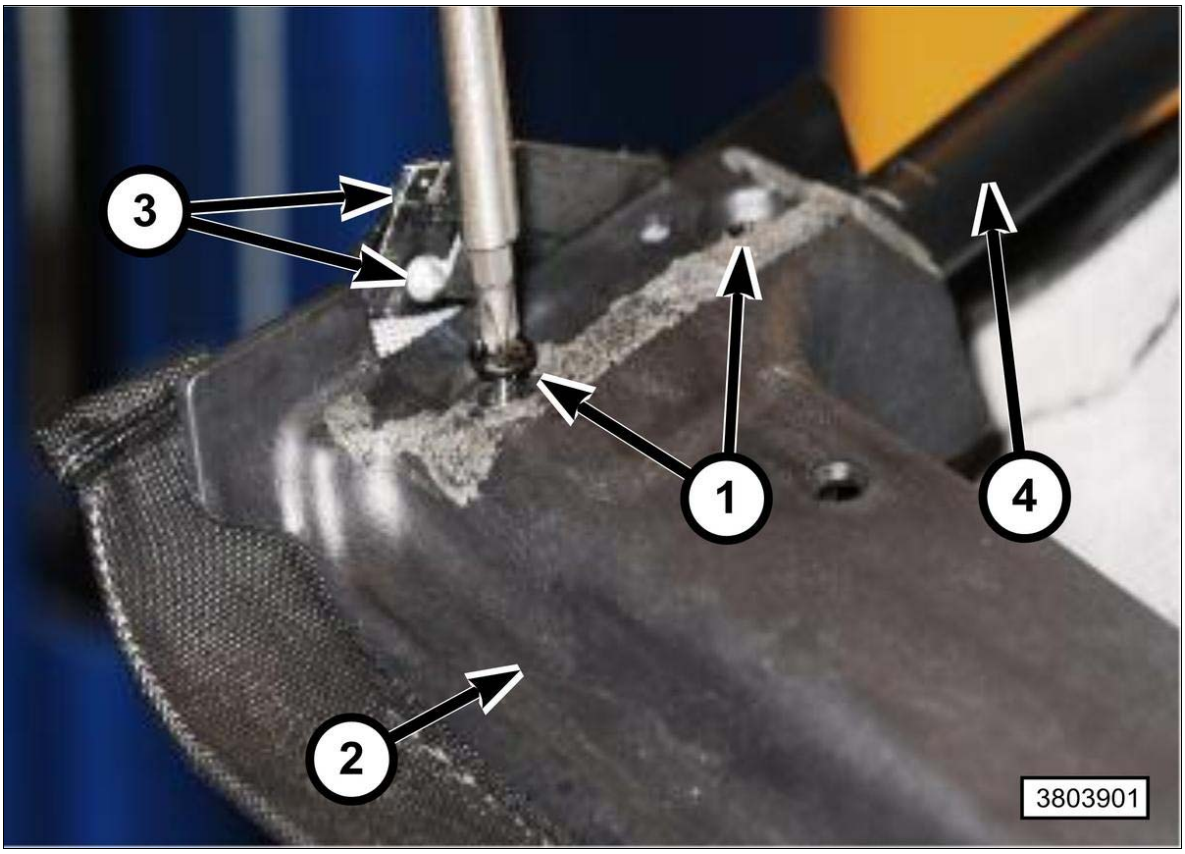

Courtesy of CHRYSLER GROUP, LLC

1 - Lower Header Panel Fasteners
2 - Lower Header Panel
3 - Fabric Retainer and Tension Cable Flag
4 - Frame Tube

4. Remove the fasteners (1) that hold the lower plastic header panel (2) to the soft top frame tube (4).

Fig 3: Bearing Cap Bolts

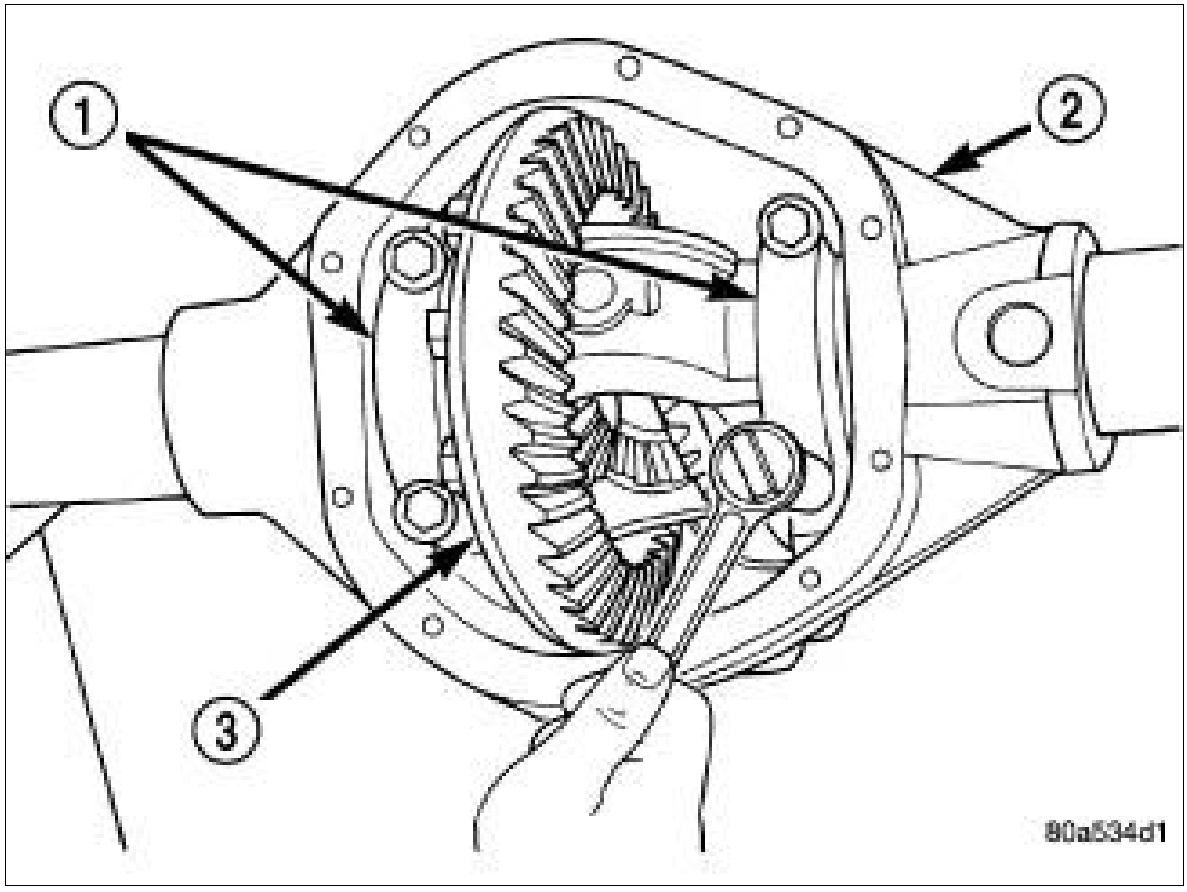

Courtesy of CHRYSLER GROUP, LLC

5. Loosen differential bearing cap (1) bolts.

Fig 1: 115 Volt AC Outlet

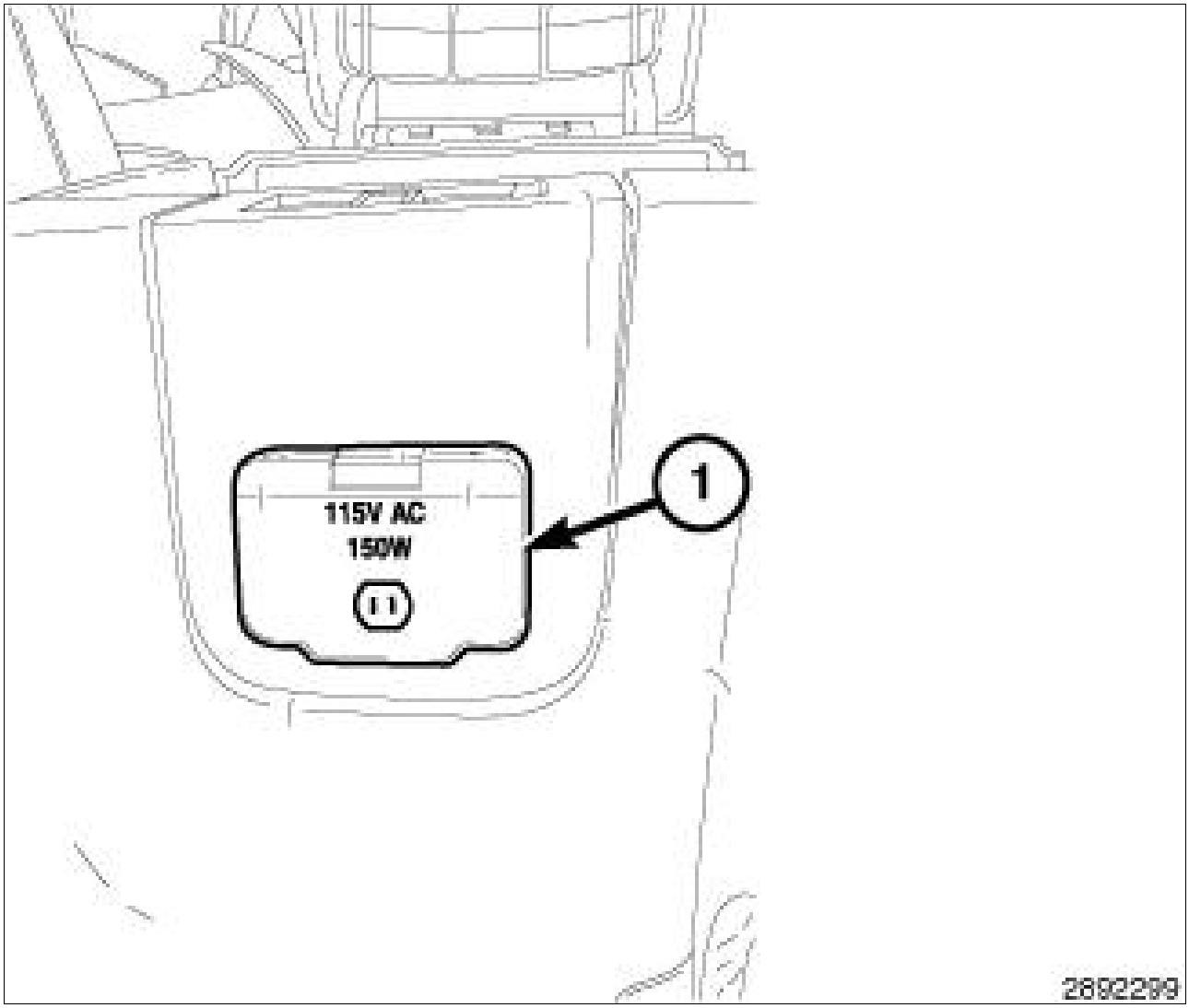

Courtesy of CHRYSLER GROUP, LLC

The 115 Volt AC outlet (1) is mounted near the lid of the floor console. The vehicle is able to supply 115 Volt AC power through the use of a inverter module. The inverter module is located below the steering column, underneath the steering column opening cover. The inverter converts the 12 Volt DC from the vehicle battery system to a 115 Volt AC output.

The inverter module provides A/C power for user accessories when the 115 Volt AC outlet switch (4) in the instrument panel center stack is in the "ON" position. The outlet switch is part of the instrument panel upper switch pod assembly and is not available for service as an individual part. If the switch is damaged or inoperative the complete upper switch pod assembly must be replaced, refer to POD, SWITCH, REMOVAL for the appropriate procedure.

OUTLET, POWER, 115 V > OPERATION > OPERATION

The 115 volt AC power outlet switch receives 12 volts from the Integrated Power Module (IPM) and passes it as an enable signal to the inverter module. The inverter module also receives 12 volts via the IPM and inverts this to a 115 volt AC output. The enable signal received from the power outlet switch

- The camshafts are a nodular cast iron design.
- Each camshaft has a pressed on magnetic timing wheel that is magnetically encoded.
- The two Camshaft Position (CMP) sensors are located between the timing wheels.
- Attached to the rear of the right exhaust camshaft is a centrifuge which is part of the crankcase ventilation system.

The centrifuge is used to separate oil droplets from the crankcase gases before they enter the PCV valve. Four bearing journals are machined into the camshaft. Camshaft end play is controlled by two thrust walls that border the nose piece journal.

CYLINDER HEAD > CAMSHAFT, ENGINE > OPERATION > OPERATION

Fig 1: Right Hand Camshafts

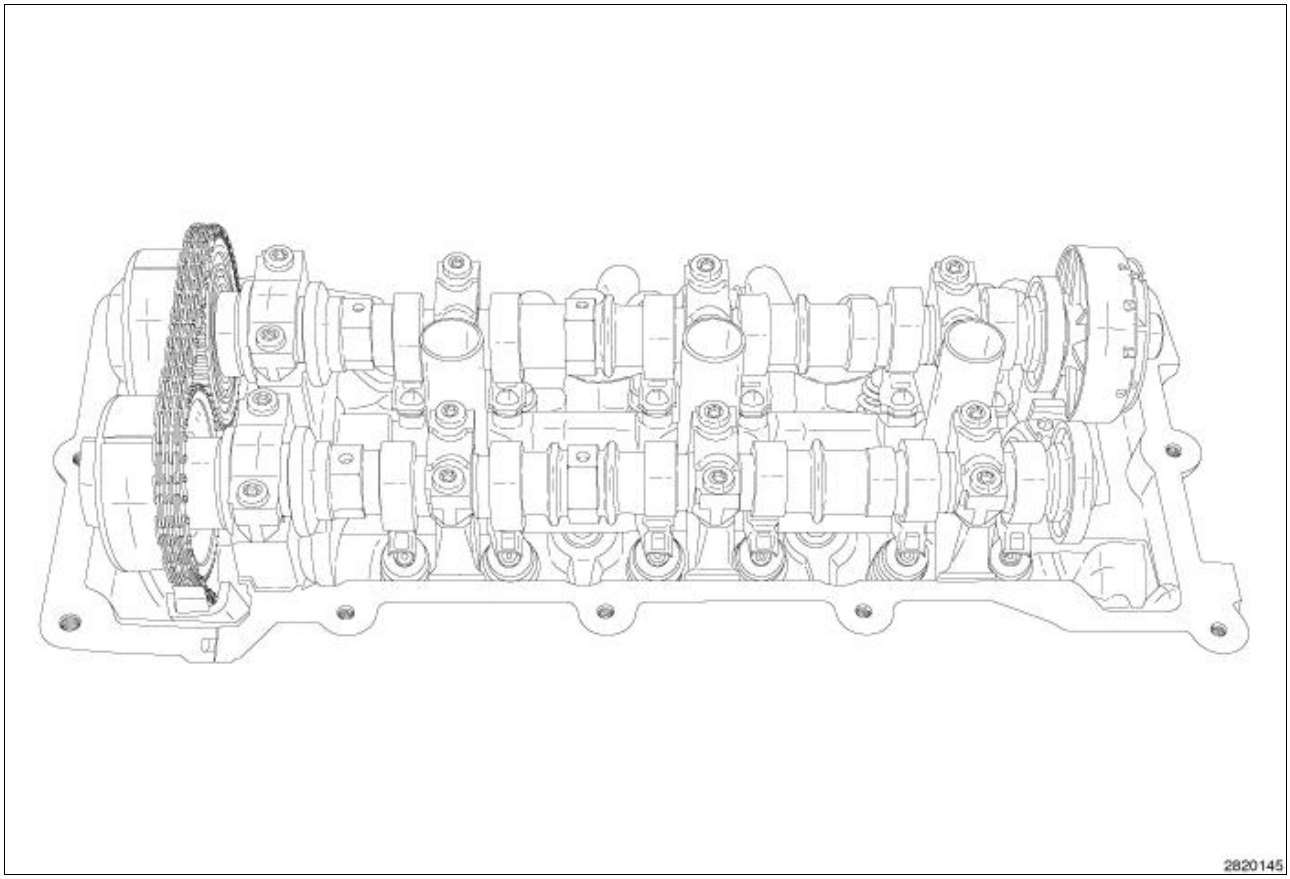

Courtesy of CHRYSLER GROUP, LLC

NOTE:

RH camshafts shown in illustration, LH camshafts similar.

The camshaft has precisely machined (egg shaped) lobes to provide accurate valve timing and duration. The camshaft is driven by the crankshaft via drive sprockets and chains.

- Tapping the hole with a special Heli-Coil™ Tap, or equivalent.
- Installing an insert into the tapped hole to bring the hole back to its original thread size.

STANDARD PROCEDURE > FORM-IN-PLACE GASKETS AND SEALERS

> *NOTE:*
>
> *All of the sealants mentioned below are not used on every engine, they are listed as a general reference guide. See service information for specific sealer usage.*

There are numerous places where form-in-place gaskets are used on the engine. Care must be taken when applying form-in-place gaskets to assure obtaining the desired results.**Do not use form-in-place gasket material unless specified.** Bead size, continuity, and location are of great importance. Too thin a bead can result in leakage while too much can result in spill-over which can break off and obstruct fluid feed lines. A continuous bead of the proper width is essential to obtain a leak-free gasket. All sealing surfaces that use form-in-place gaskets and sealers **must** be free of grease or oil. Surfaces should be cleaned with Mopar® brake parts cleaner prior to sealer application. After the sealer is applied, the parts should be assembled within 10 minutes.

There are numerous types of form-in-place gasket materials that are used in the engine area. Each has different properties and can not be used in place of the other.

SEALANT TYPES

- **MOPAR® ENGINE SEALANT RTV SILICONE RUBBER ADHESIVE** is used to seal components exposed to engine oil. This material is a specially designed black silicone rubber RTV that retains adhesion and sealing properties when exposed to engine oil. Moisture in the air causes the material to cure. This material is available in three ounce tubes and has a shelf life of one year. After one year this material will not properly cure. Always inspect the package for the expiration date before use.
- **MOPAR® ATF-RTV** is a specifically designed black silicone rubber RTV that retains adhesion and sealing properties to seal components exposed to automatic transmission fluid, engine coolants, and moisture. This material is available in three ounce tubes and has a shelf life of one year. After one year this material will not properly cure. Always inspect the package for the expiration date before use.
- **MOPAR® GASKET MAKER** is an anaerobic type gasket material. The material cures in the absence of air when squeezed between two metallic surfaces. It will not cure if left in the uncovered tube. The anaerobic material is for use between two machined surfaces. Do not use on flexible metal flanges.
- **MOPAR® BED PLATE SEALANT** is a unique (green-in-color) anaerobic type gasket material that is specially made to seal the area between the bed plate and cylinder block without disturbing the bearing clearance or alignment of these components. The material cures slowly in the absence of air when torqued between two metallic surfaces, and will rapidly cure when heat is applied.
- **MOPAR® THREEBOND™ ENGINE RTV** is formulated as a high performance temperature vulcanized silicone with good elasticity, temperature and chemical resistance when cured. It is

Fig 3: Shop Air Supply & Valve Spring Compressor

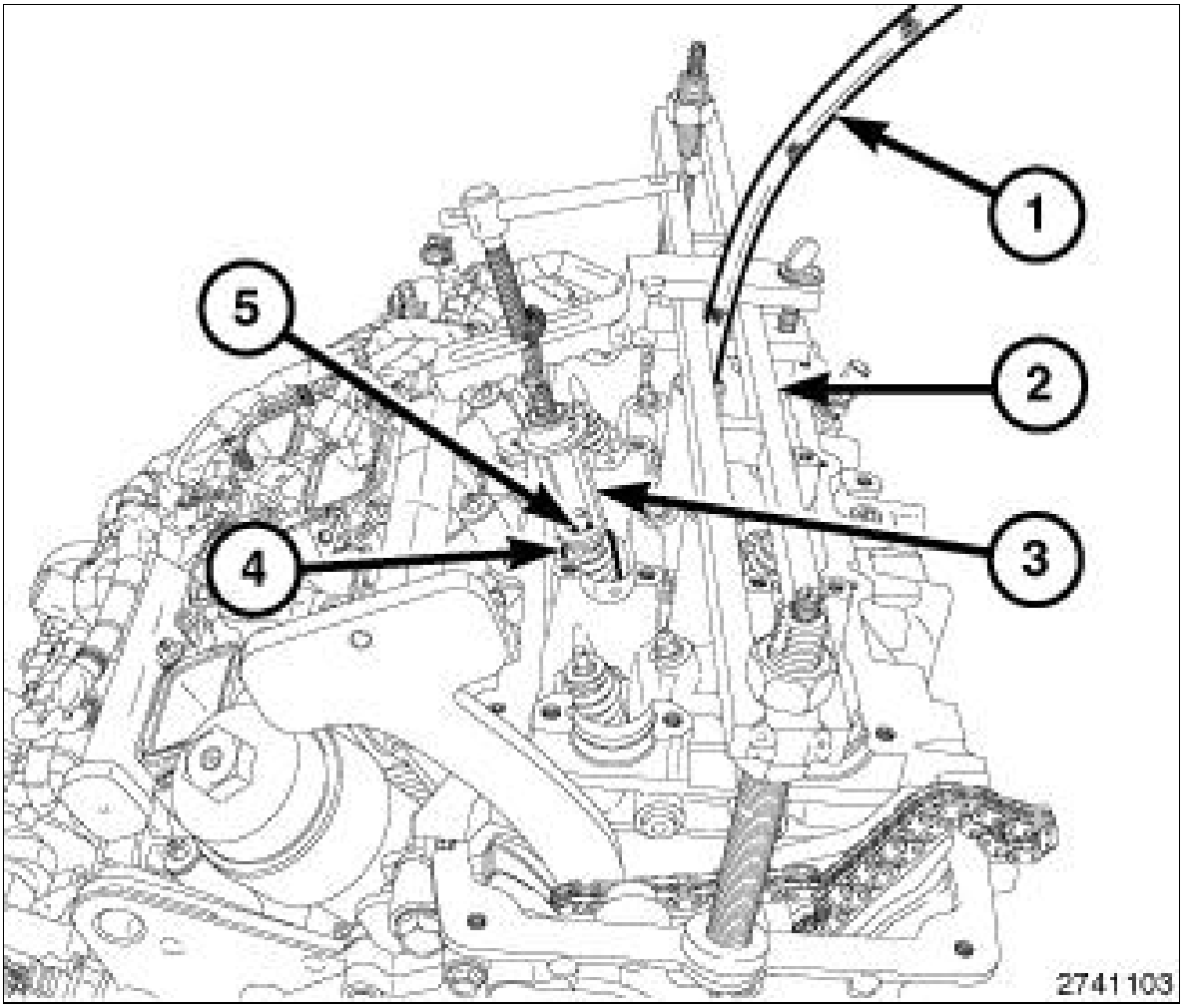

Courtesy of CHRYSLER GROUP, LLC

> *NOTE:*
>
> *Number 4 cylinder intake valve spring compression shown in illustration, all other valves similar.*

3. Using Valve Spring Compressor Adapter (special tool #10224, Adapter, Valve Spring) (3) with Valve Spring Compressor (special tool #MD998772A, Compressor, Valve Spring) (2), compress the valve spring (4) **only enough** to install the valve retaining locks (5).
4. Relieve the air pressure and remove the spark plug adapter.
5. Install the spark plug and tighten to 17.5 N.m (13 ft. lbs.). Refer to SPARK PLUG, INSTALLATION .

NOTE:

The temperature sensor is located on the thermostat housing (2). In order to gain access to the sensor. You must remove the thermostat housing (2).

1. Remove the thermostat housing (2). Refer to THERMOSTAT, REMOVAL .

Fig 2: Lower Bypass Hose, EGR Cooler Supply Line & Temperature Sensor

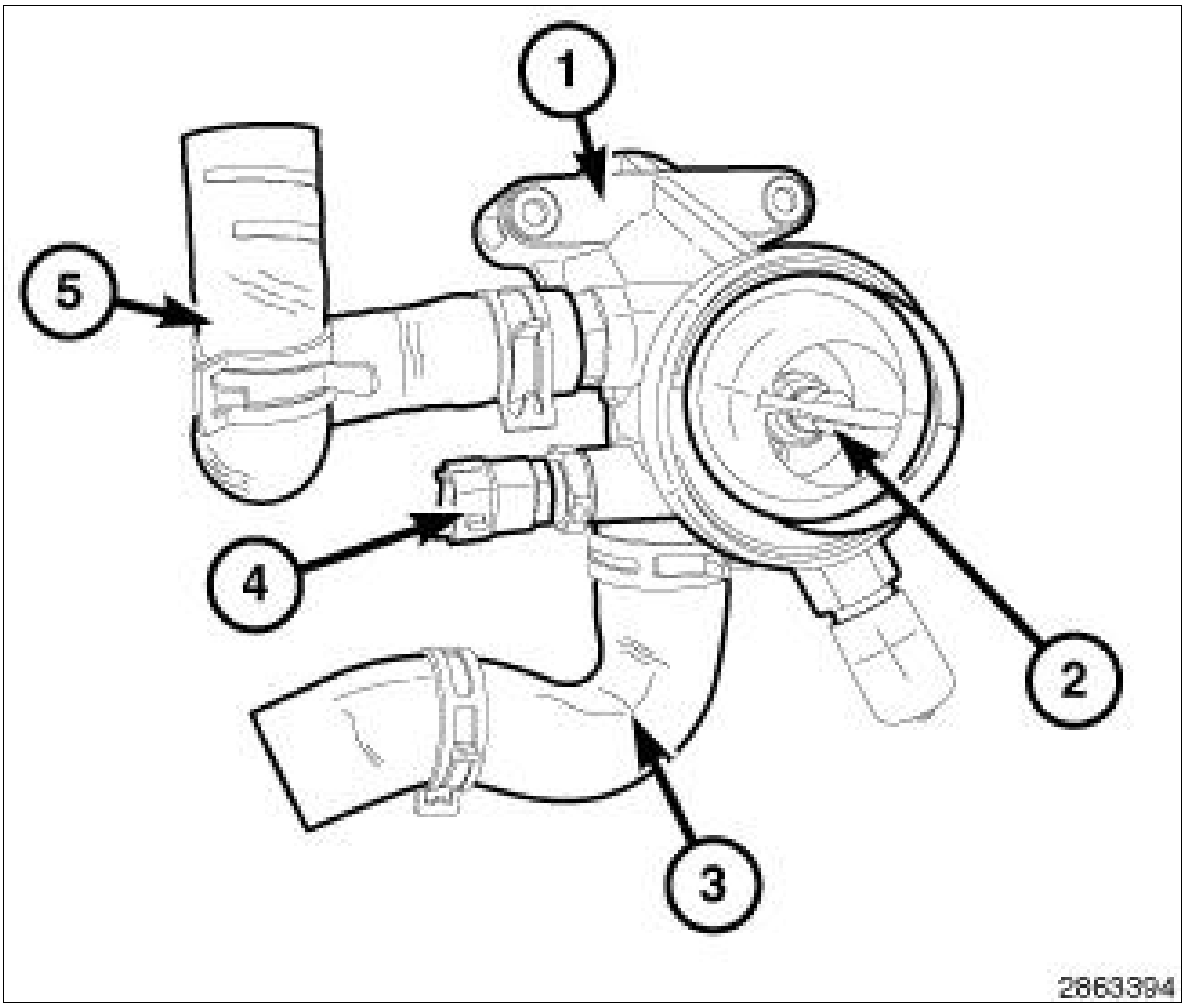

Courtesy of CHRYSLER GROUP, LLC

2. Remove the coolant temperature sensor (4) from thermostat housing (1).

ENGINE > SENSOR, COOLANT TEMPERATURE > REMOVAL > 3.0L/3.6L

Fig 7: Fuel Injection Pump Timing Marks

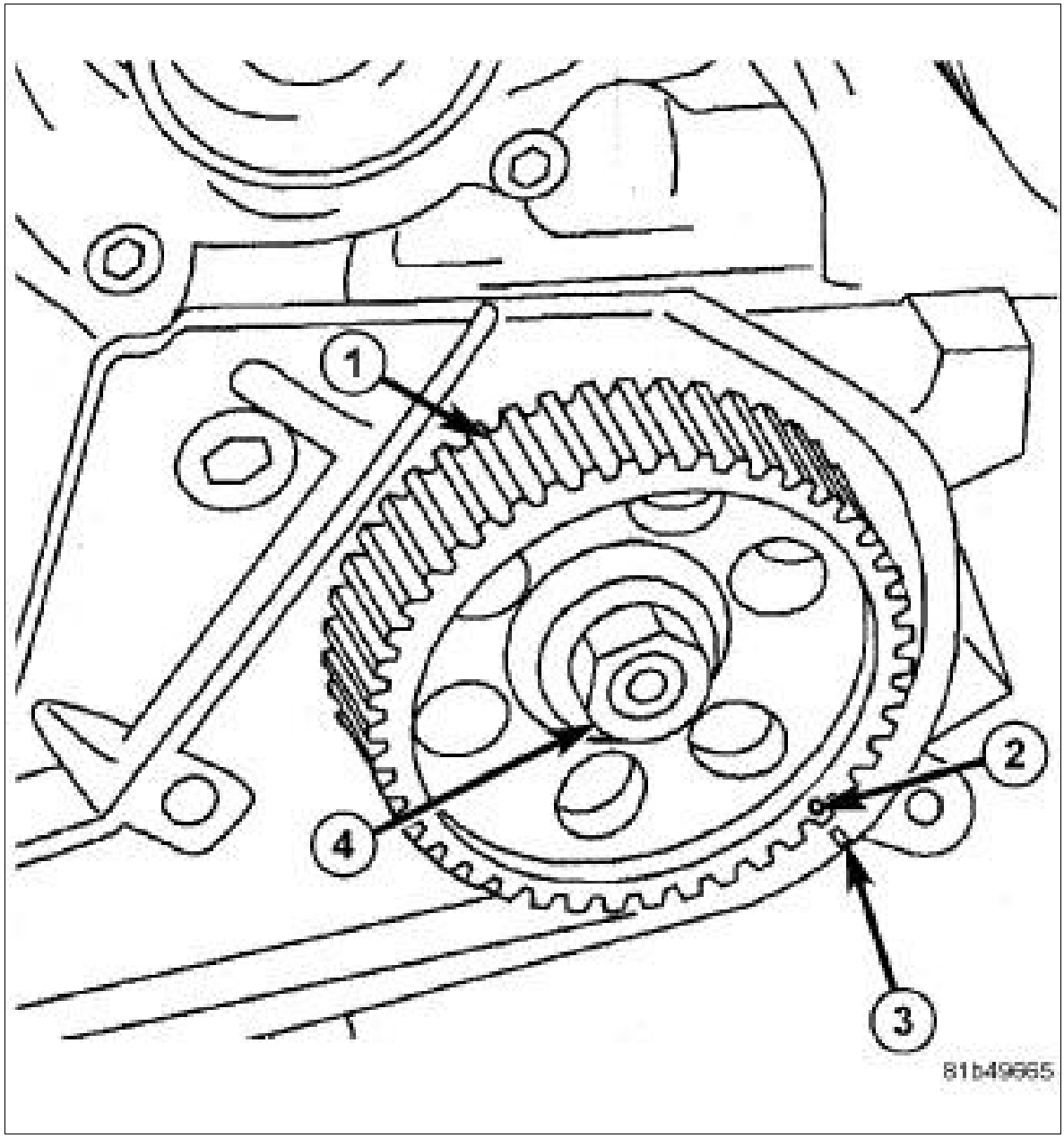

Courtesy of CHRYSLER GROUP, LLC

18. Position sprocket (1) onto pump shaft and install nut (4) finger tight.

Composite		Phase 2
Light Duty Vehicles		
1996 & Newer	10.0	8.0
1983-95	15.0	12.0
1980-82	30.0	24.0
1975-79	65.0	52.0
1968-74	120.0	96.0
High Altitude Light Duty Vehicles		
1983-84	30.0	24.0
1982	45.0	36.0
Light Duty Trucks (0-6000 Lbs. GVWR)		
1996 & Newer (Less Than 3750 LVW)	10.0	8.0
1996 & Newer (More Than 3750 LVW)	13.0	10.0
1984-95	40.0	32.0
1979-83	70.0	56.0
1975-78	80.0	64.0
1968-74	120.0	96.0
High Altitude Light Duty Trucks (0-6000 Lbs. GVWR)		
1988 & Newer	60.0	48.0
1984-87	60.0	48.0
1982-83	90.0	72.0
Light Duty Trucks (6001-8500 Lbs. GVWR)		
1996 & Newer (Less Than 5750 ALVW)	13.0	10.0
1996 & Newer (More Than 5750 ALVW)	15.0	12.0
1984-95	40.0	32.0
1979-83	70.0	56.0
1975-78	80.0	64.0
1968-74	120.0	96.0
High Altitude Light Duty Trucks (6001-8500 Lbs. GVWR)		
1984 & Newer	60.0	48.0
1982-83	90.0	72.0
Heavy Duty Trucks (Greater Than 8500 Lbs. GVWR)		

Fig 1: Connect The Selector Valve To The Detent Plate

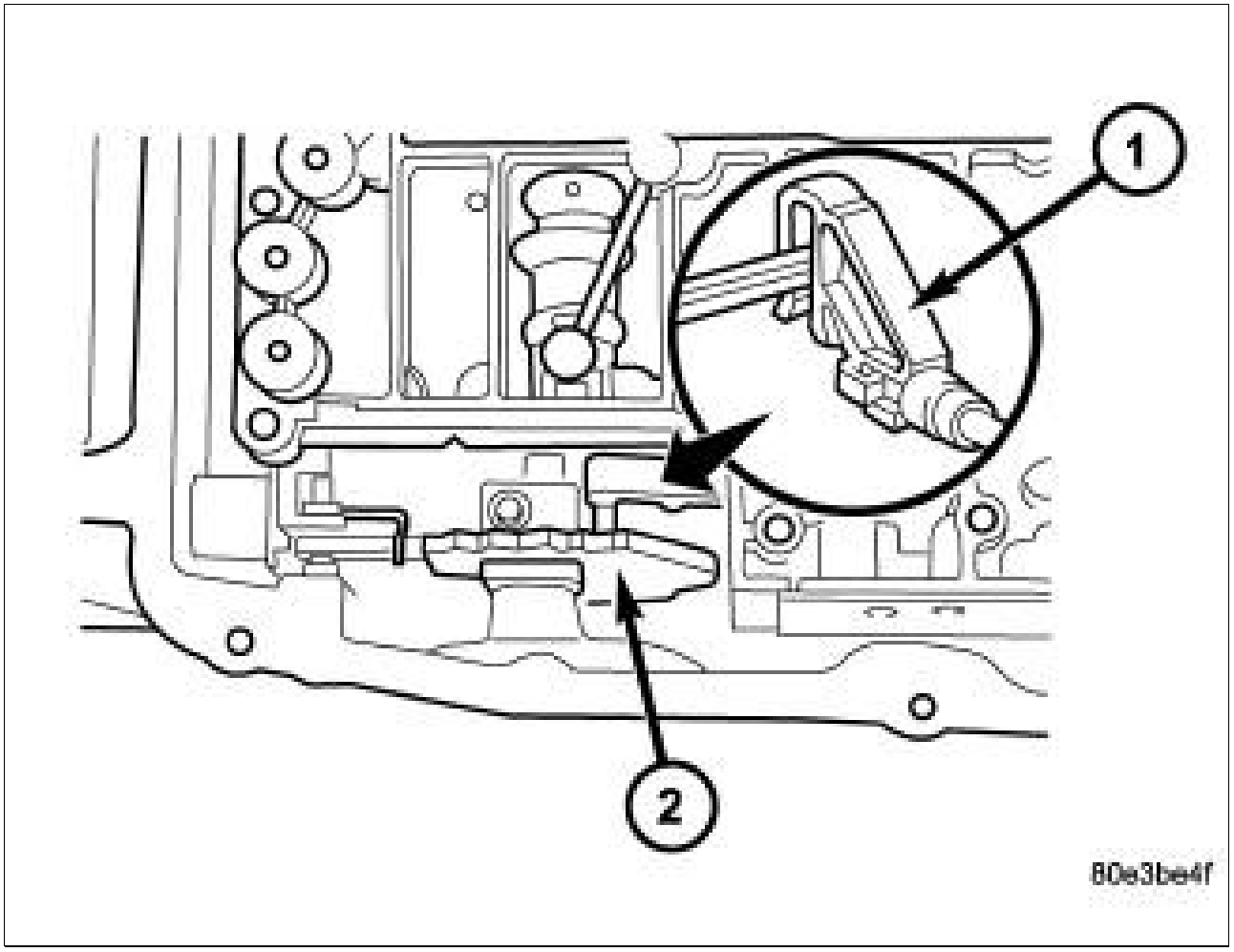

Courtesy of CHRYSLER GROUP, LLC

1 - SELECTOR VALVE
2 - DETENT PLATE

1. Position the electrohydraulic unit in the transmission housing.
2. Insert selector valve (1) in driver of detent plate (2). When installing the electrohydraulic control module in the transmission housing, the plastic part of the selector valve (1) must engage in the driver of the detent plate (2).