General Description

Description of Function and Operation

Outline view

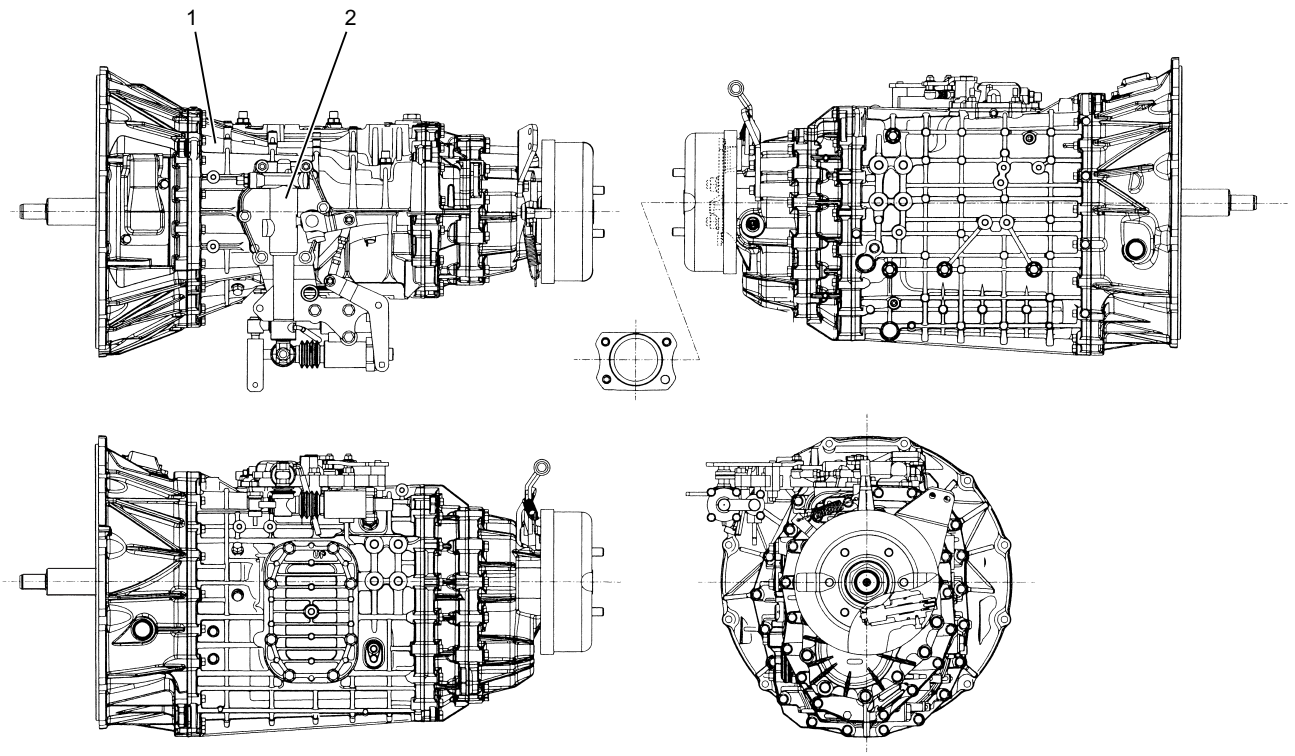

Legend

1. MZW Transmission
2. Control Box

Functional Inspection

Condition	Possible Cause	Correction
Abnormal noise	Insufficient gear oil or bad gear oil	Refill or replace
	Wear on the flywheel pilot bearing	Replace
	Wear or damage of the bearing (input shaft, counter shaft, and output shaft)	Replace
	Wear, scratches, or damage on the gear (input shaft, counter shaft, output shaft, and reverse idle gear)	Replace
	Wear on the spline (main shaft and synchronizer clutch hub)	Replace
	Seize on the gear or bearing thrust	Replace
	Insufficient backlash in the mating gear	Replace
	Displacement of the transmission	Adjust
Difficulty in shifting	Insufficient gear oil or bad gear oil	Refill or replace
	Failure in clutch pedal play	Adjust
	Wear or insufficient grease on the shift lever sliding area	Repair or replace, apply grease
	Shift block operation failure	Repair or replace
	Wear on the groove of the synchronizer sleeve or the shift arm	Replace the worn-out part
	Wear on the thrust washer, collar or gear thrust surface (play in the input shaft and counter shaft thrust)	Replace the worn-out part
	Wear on the synchronizer components	Replace
Falling out of gears	Wear on the shift lever sliding area, excessive amount of play	Replace the worn-out part
	Wear on the detent ball, ball seat, and spring	Replace the detent ASM
	Wear on the sliding section of the control box or shift rod	Replace
	Wear on the groove of the synchronizer sleeve or the shift arm	Replace the worn-out part
	Wear on the thrust washer, collar or gear thrust surface (play in the input shaft and counter shaft thrust)	Replace the worn-out part
	Wear or damage on the bearing	Replace
	Wear on the spline (input shaft and synchronizer hub)	Replace
	Weakening or damage to the synchronizer spring	Replace
Oil leakage	Excessive amount of oil	Adjust to the proper amount
	Looseness of the drain plug or the filler plug	Tighten the plugs and refill oil
	Gasket damage or breakage	Replace
	Wear or damage on the oil seal	Replace

Transmission oil inspection

1. Remove the filler plug.
2. Inspect whether the oil level is lower than the bottom edge of the hole, through the filler plug hole as shown in the diagram.
3. Refill the oil if the oil level is below the specified level.
   Oil used
   - GL-5 BESCO GEAR OIL SH 80W-90 or equivalent
4. Tighten the filler plug at the specified torque.

Tightening torque: 39 N·m (4.0 kg·m / 29 lb·ft)

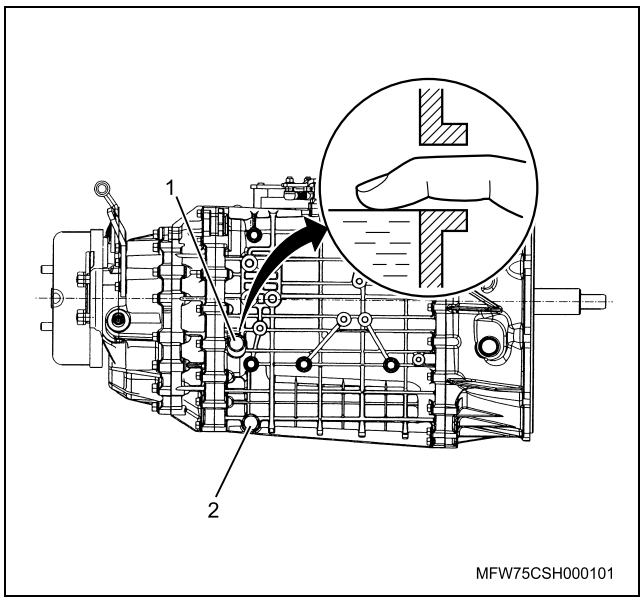

Legend
1. Filler plug
2. Drain plug

Replacement of the transmission oil

1. Start the engine and warm up the transmission body sufficiently.
2. Stop the engine, remove the drain plug and the filler plug, and then drain the oil.

CAUTION:
Be careful not to burn while engine is hot.

3. Tighten the drain plug.

Tightening torque: 39 N·m (4.0 kg·m / 29 lb·ft)

4. From the filler plug hole, fill oil up to the lower edge of the filler plug hole.
   Oil used
   - GL-5 BESCO GEAR OIL SH 80W-90 or equivalent

Oil capacity [Reference value] L (US gal. / Imp gal.)	
without side PTO	5.3 (1.40 / 1.17)
with side PTO	6.0 (1.59 / 1.32)

5. Tighten the filler plug at the specified torque.

Tightening torque: 39 N·m (4.0 kg·m / 29 lb·ft)

NOTE:
After conducting an transmission fluid change, instrument panel (IP) cluster operation must be performed to reset the maintenance time data. Refer to "Instrument Panel (IP) Cluster System" in Section 9E Instrumentation/Driver Info.

Primary Specifications

Model			MZW6P
Number of primary teeth			43 / 22
Gear ratio	1st	13 / 44	6.615
	2nd	21 / 44	4.095
	3rd	29 / 35	2.358
	4th	37 / 29	1.531
	5th	Direct coupling	1.000
	6th	46 / 17	0.722
	Rev	13 / 27 / 44	6.615
Speedometer gear ratio			15 / 5
Oil capacity [Reference value] L (US gal. / Imp gal.)		without side PTO	5.3 (1.40 / 1.17)
		with side PTO	6.0 (1.59 / 1.32)
Oil type			API GL-5 BESCO GEAR OIL SH 80W-90 or equivalent

- Check to see that there are no cracks or misalignments caused by excessive tapping of the clip.

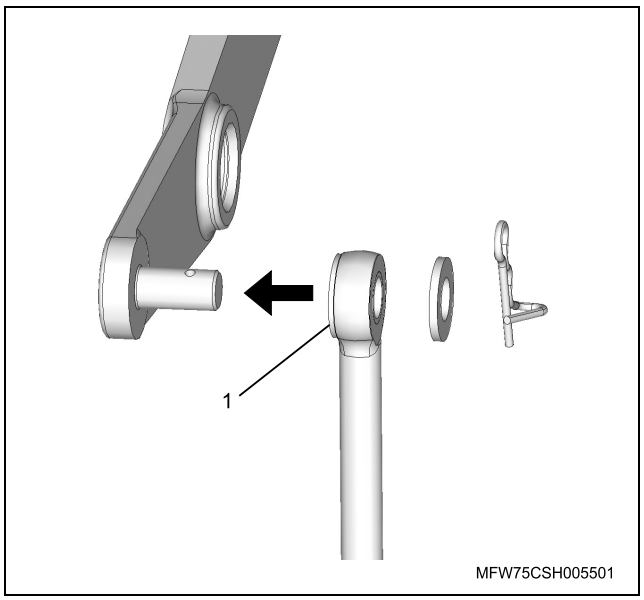

3. Adjust the length of the shift cable (cab side) to the specified value.
   - Installation length of the shift cable: 210 mm (8.27 in)

NOTE:

- Do not hold the guide pipe section of the control cable, when you install or remove the control cable, as doing so could break the guide pipe.
- Check to see that there are no cracks or misalignments caused by excessive tapping of the clip.

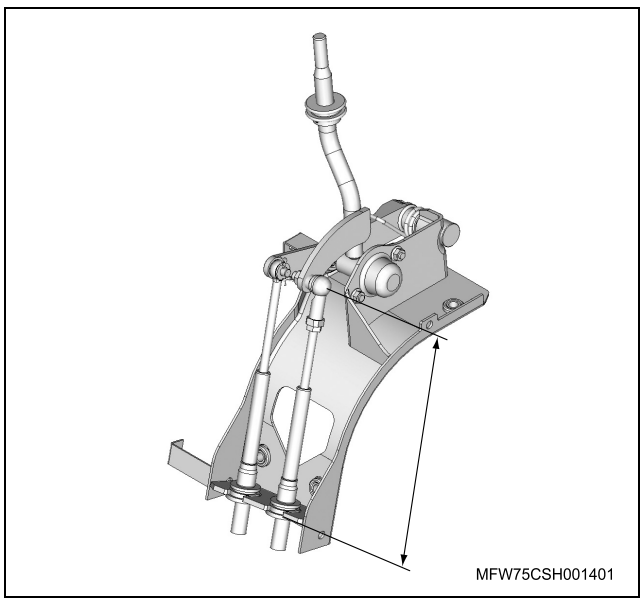

4. Install the shift cable (cab side).
   - Loosen the lock nut on the ball joint, turn the ball joint and after adjusting the cable length, tighten each nut at the specified torque.

Tightening torque
Ball joint lock nut: 13 N·m (1.3 kg·m / 113 lb·in)
Ball joint tightening nut (M8):
22 N·m (2.2 kg·m / 16 lb·ft)

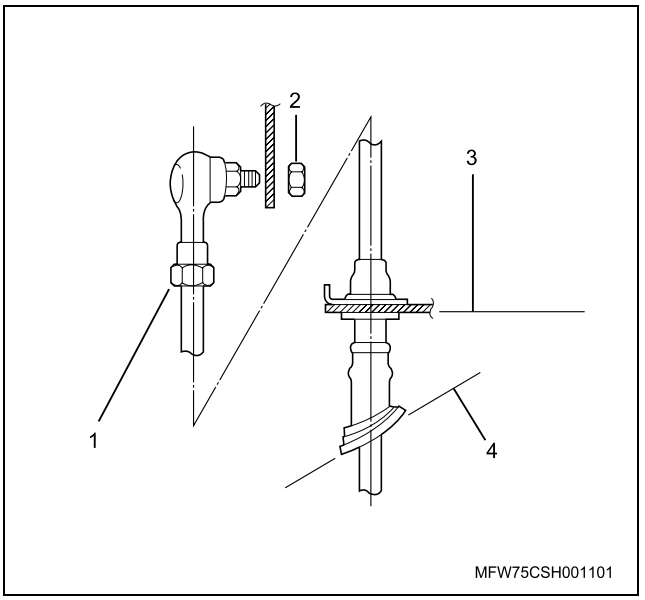

Legend
1. Lock nut
2. Tightening nut
3. To center of joint
4. Cab floor

5. Adjust the length of the select cable (transmission side) to the specified value.

NOTE:

- Measure the length between the end of bracket and the center of ball joint (1).
- If the control cable boot is twisted, loosen the lock nut (2) to correct the twist.

Installed length of the select cable

Engine type	Length	
	with power assist	without power assist
4H Engine	295 mm (11.61 in)	295 mm (11.61 in)
6H Engine (Day cab)	320 mm (12.60 in)	320 mm (12.60 in)
6H Engine (Full cab) (Cross member mounting)	350 mm (13.78 in)	320 mm (12.60 in)
6H Engine (Full cab) (Side frame mounting·FVR)	320 mm (12.60 in)	320 mm (12.60 in)

MZW Transmission

Components

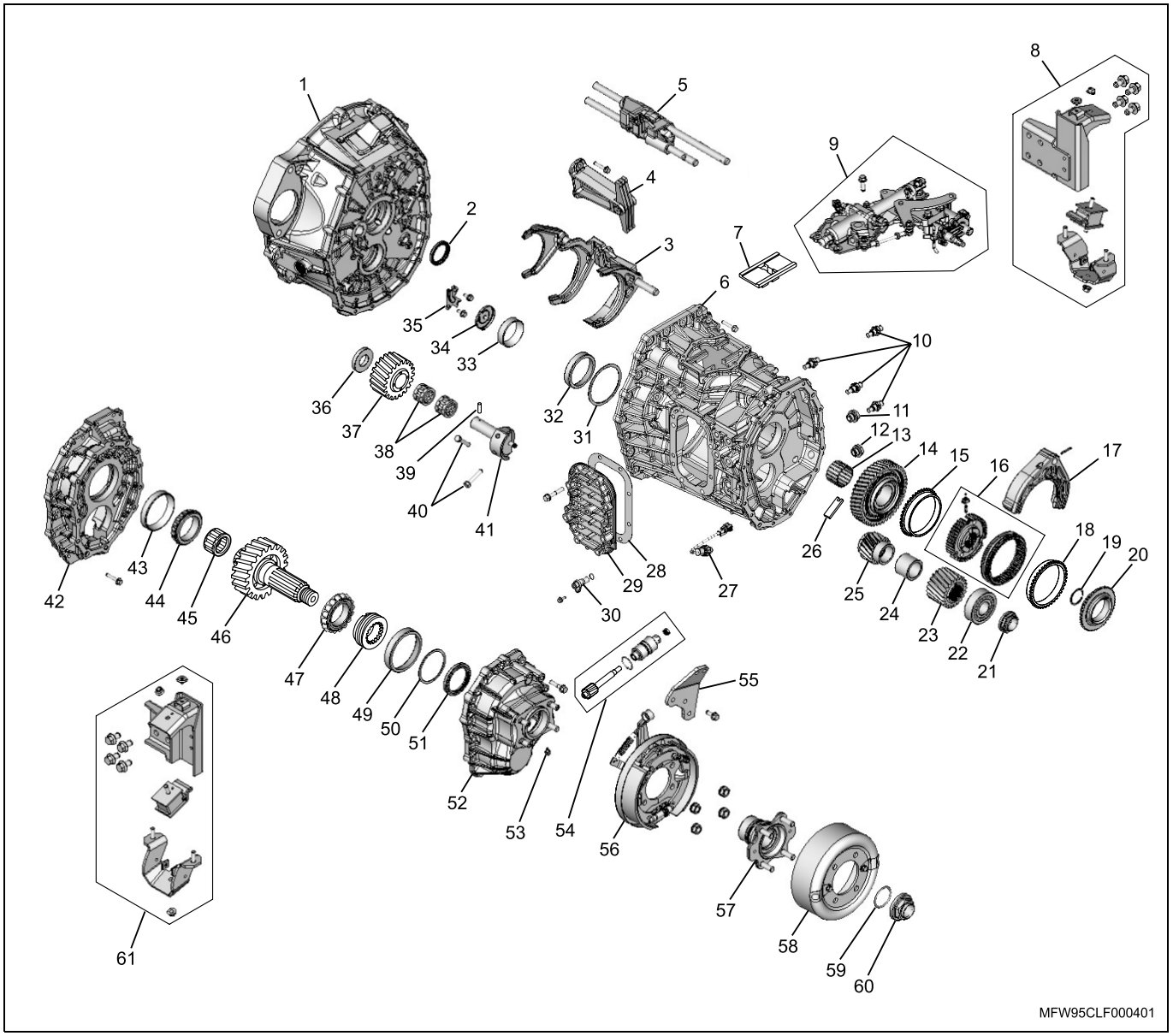

Legend

1. Clutch Housing
2. Front Oil Seal
3. Gear Control (Lower)
4. Relay Lever ASM
5. Gear Control (Upper)
6. Front Case
7. Interlock Plate
8. Engine Rear Mounting ASM RH (4H Engine)
9. Control Box
10. Detent ASM
11. Filler Plug
12. Drain Plug
13. 6th Needle Bearing
14. 6th Gear
15. 6th Block Ring
16. 5th-6th Gear Clutch Hub ASM and Sleeve
17. 5th-6th Gear Shift Arm
18. 5th Block Ring
19. Snap Ring
20. 5th Dog Clutch
21. Counter End Nut
22. Counter End Bearing
23. Output Counter Gear
24. Collar
25. 6th Counter Gear
26. Magnet
27. Backup Light Switch
28. Packing
29. PTO Cover
30. Dummy Sensor Cap
31. Shim
32. Counter Middle Bearing Outer Race
33. Counter Front Bearing Outer Race
34. Oil Nozzle

List of Tightening Torques

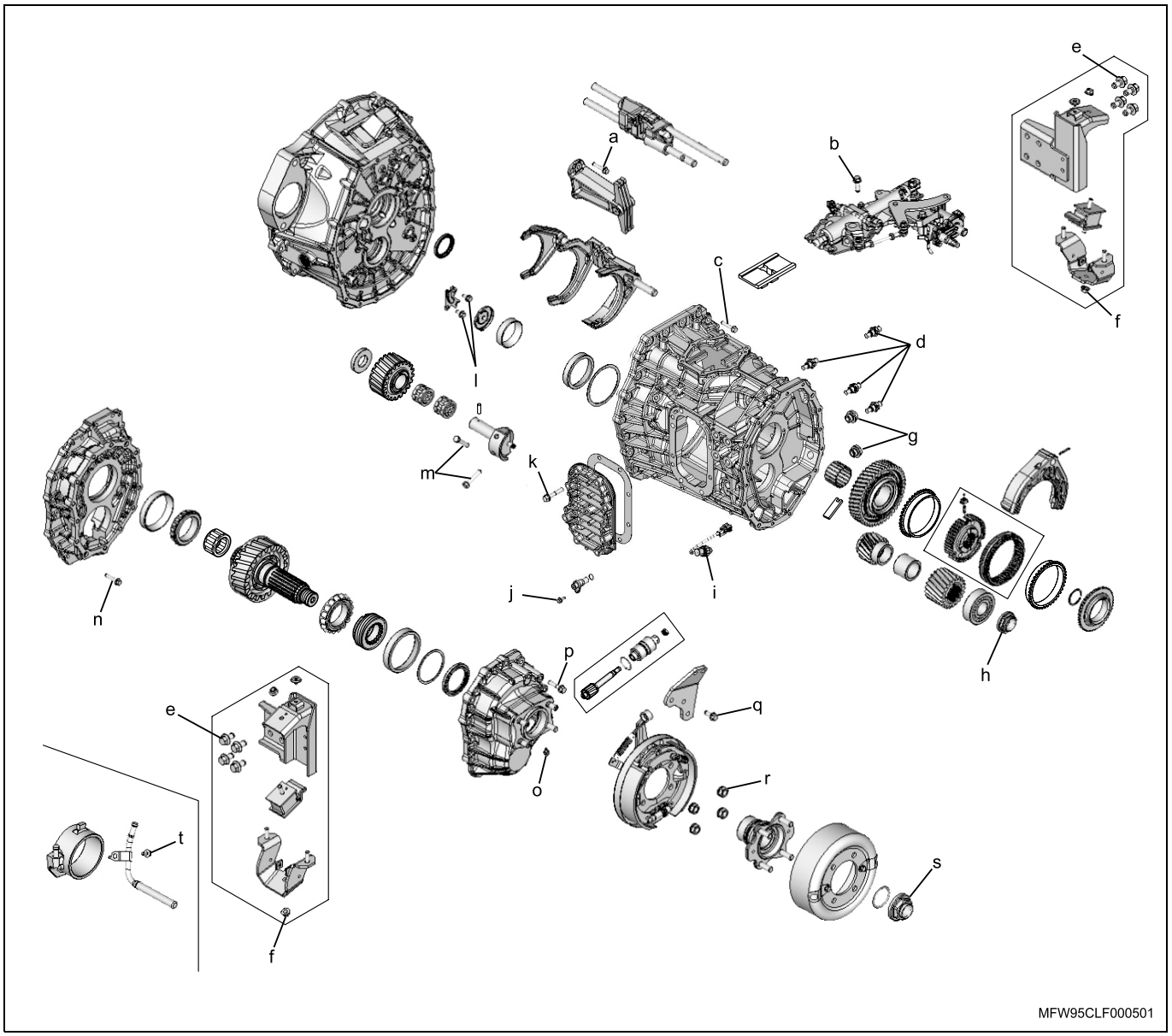

Legend

(a) 23 N·m (2.3 kg·m / 17 lb·ft)
(b) 26 N·m (2.7 kg·m / 20 lb·ft)
(c) 23 N·m (2.3 kg·m / 17 lb·ft)
(d) 28 N·m (2.9 kg·m / 21 lb·ft)
(e) 148 N·m (15.1 kg·m / 109 lb·ft)
(f) 40 N·m (4.1 kg·m / 30 lb·ft)
(g) 39 N·m (4.0 kg·m / 29 lb·ft)
(h) 539 N·m (55.0 kg·m / 398 lb·ft)
(i) 39 N·m (4.0 kg·m / 29 lb·ft)
(j) 8 N·m (0.8 kg·m / 69 lb·in)
(k) 37 N·m (3.8 kg·m / 27 lb·ft)
(l) 15 N·m (1.5 kg·m / 11 lb·ft)
(m) 37 N·m (3.8 kg·m / 27 lb·ft)
(n) 23 N·m (2.3 kg·m / 17 lb·ft)
(o) 10 N·m (1.0 kg·m / 87 lb·in)
(p) 50 N·m (5.1 kg·m / 37 lb·ft)
(q) 48 N·m (4.9 kg·m / 35 lb·ft)
(r) 132 N·m (13.5 kg·m / 98 lb·ft)
(s) 785 N·m (80.0 kg·m / 579 lb·ft)
(t) 15 N·m (1.5 kg·m / 11 lb·ft)

e. Install the snap ring (2).

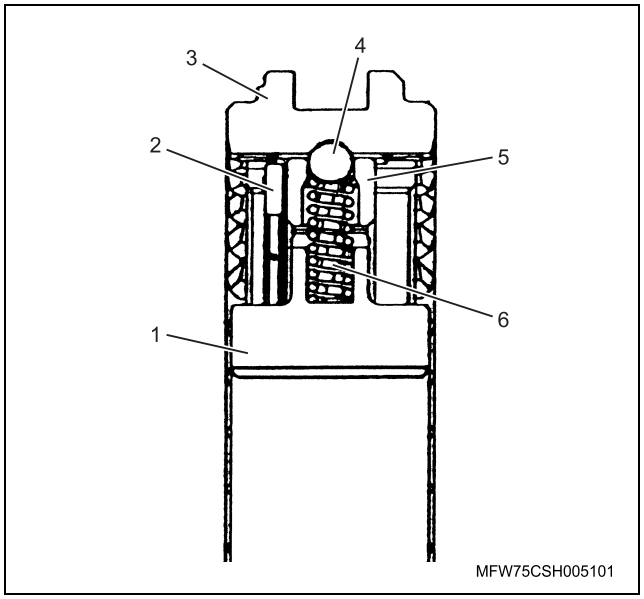

11. Apply BESCO L-2 grease or equivalent to the 2nd needle bearing, and then install the needle bearing.
12. Apply gear oil onto the 2nd gear thrust surface, and then install the gear.
13. Install the 2nd inside ring, 2nd outside ring and 2nd block ring. In this case, fully apply gear oil to the inside ring, outside ring, and block ring sliding surface.
14. Firmly fit the 1st-2nd clutch hub ASM and sleeve with a press, using the installer: 5-8840-2345-0.

NOTE:
Inspect the entire circumference to see if the ring or cone is not improperly mounted.

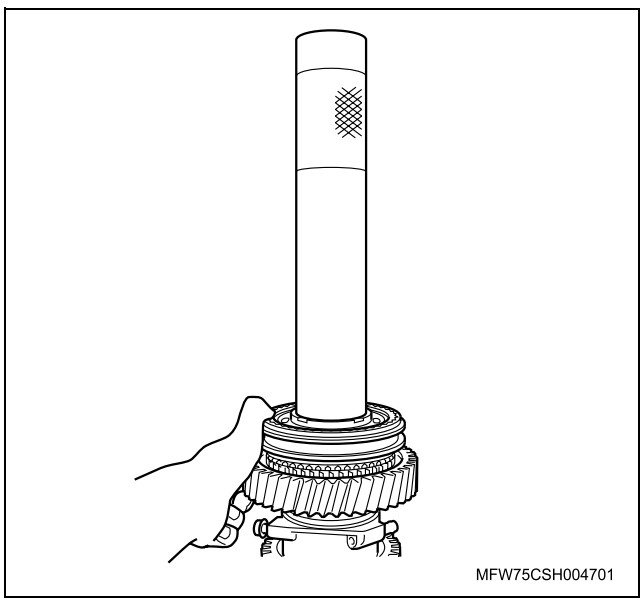

15. Apply BESCO L-2 grease or equivalent to the needle bearing and apply gear oil to the gear thrust surface, and then firmly fit the 1st gear, 1st needle bearing and collar with a press using the installer: 5-8840-2345-0 (1).

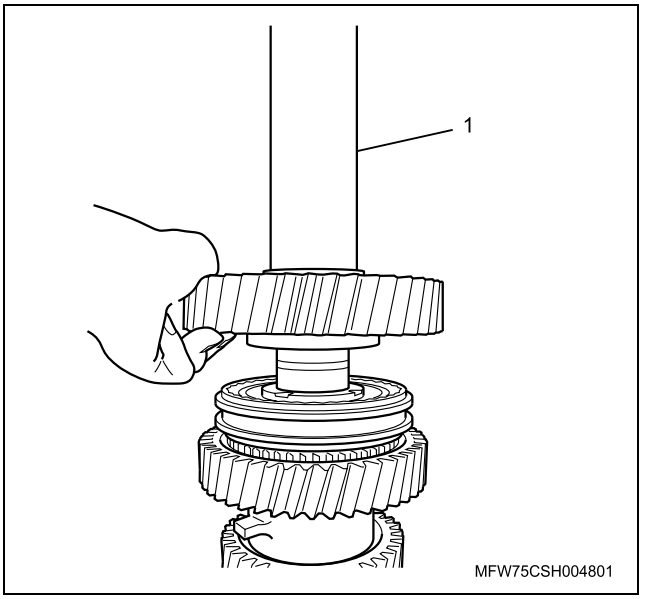

16. Install the snap ring using snap ring pliers.

NOTE:
Replace the snap ring with a new one if it is deformed or damaged and make sure it is mounted firmly.

17. Apply BESCO L-2 grease or equivalent to the reverse needle bearing, and then install the needle bearing.
18. Apply gear oil onto the reverse gear thrust surface, and then install the gear.
19. Firmly fit the sleeve and reverse clutch hub with a press, using the installer: 5-8840-2345-0.

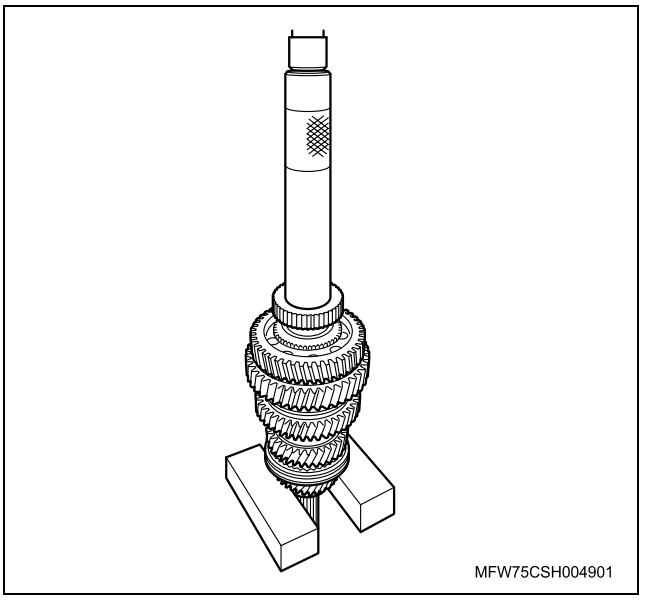

20. Firmly fit the counter front bearing inner race with a press, using the bearing installer: 5-8840-2244-0.

Relay Lever

Components

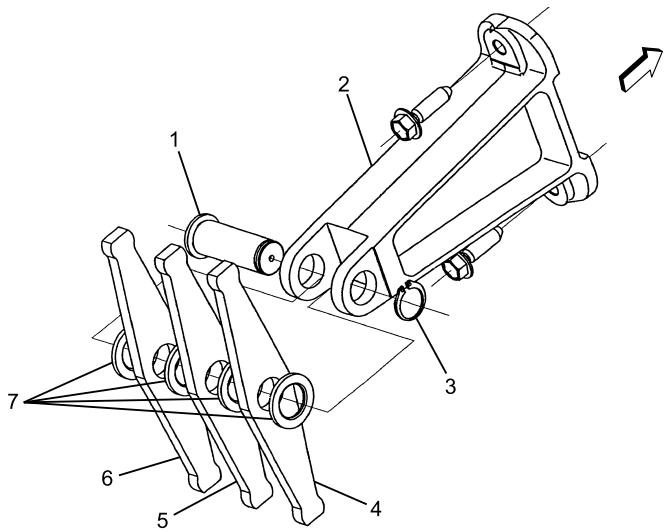

MFW75CSF000101

Legend

1. Relay Lever Shaft
2. Relay Lever Block
3. Snap Ring
4. 1st-2nd Relay Lever
5. 3rd-4th Relay Lever
6. Reverse Relay Lever
7. Plain Washer

Disassembly

1. Remove the snap ring using snap ring pliers.
2. Remove the relay lever shaft.
3. Remove the 1st-2nd relay lever, 3rd-4th relay lever, reverse relay lever and plain washer.

Reassembly

1. Install the 1st-2nd relay lever, 3rd-4th relay lever, reverse relay lever and plain washer.
2. Install the relay lever shaft.
   - Apply BESCO L-2 grease or equivalent and then assemble.
3. Install the snap ring using snap ring pliers.

NOTE:
Use new snap rings.

4H Engine

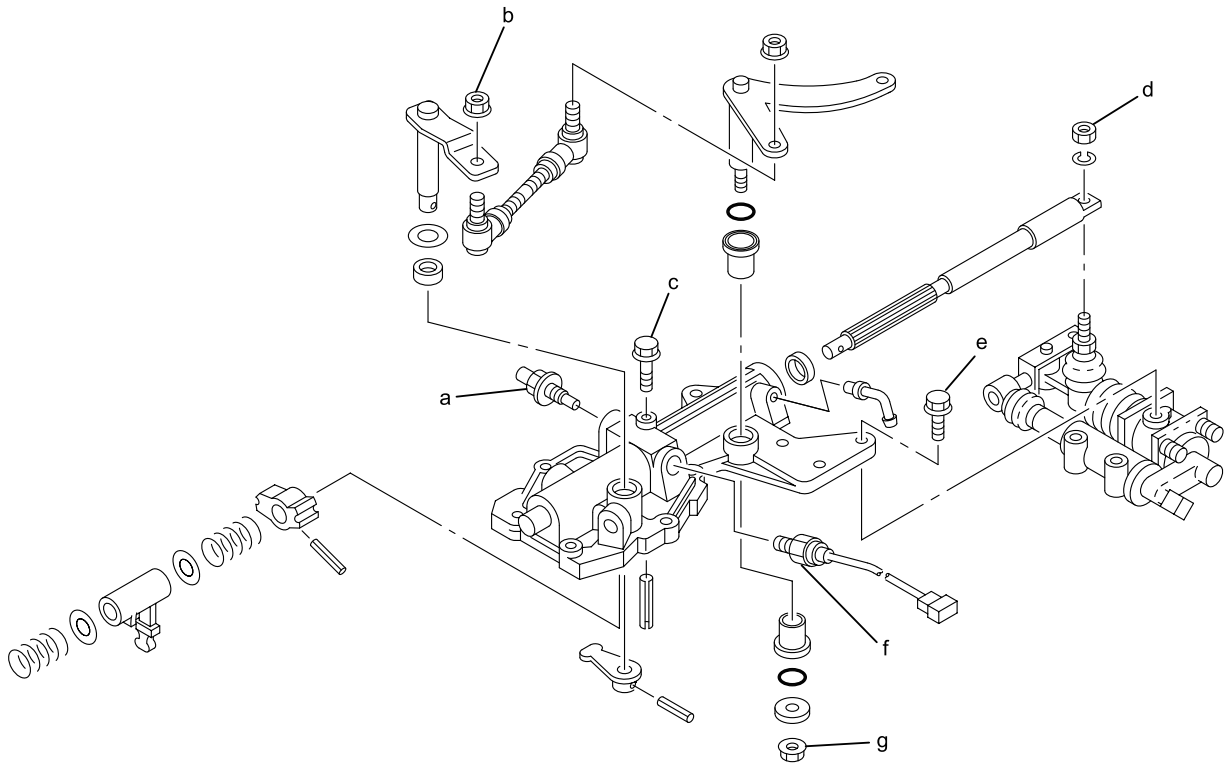

Legend

(a) 28 N·m (2.9 kg·m / 21 lb·ft)
(b) 24 N·m (2.4 kg·m / 17 lb·ft)
(c) 6 N·m (0.6 kg·m / 52 lb·in)
(d) 83 N·m (8.5 kg·m / 61 lb·ft)
(e) 43 N·m (4.4 kg·m / 32 lb·ft)
(f) 34 N·m (3.5 kg·m / 25 lb·ft)
(g) 37 N·m (3.8 kg·m / 27 lb·ft)

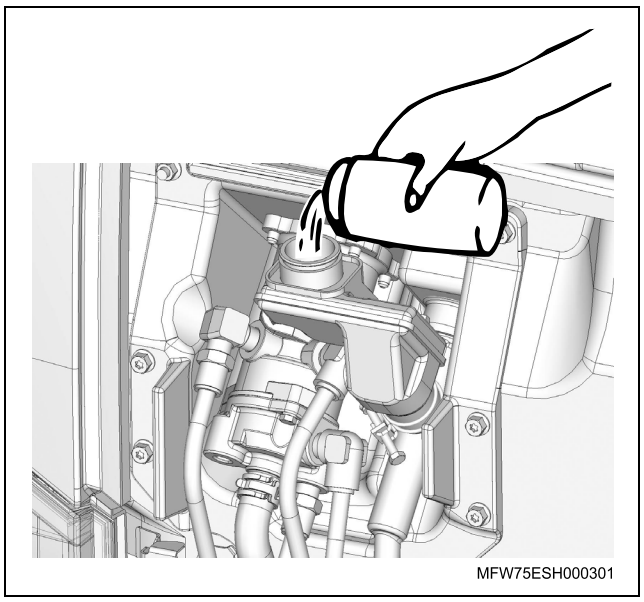
MFW75ESH000301

2. Installing the vinyl pipe.
   - Attach the vinyl pipe to the bleeder screw of the clutch booster and place the other end of the pipe into a clear container containing roughly 1/3 of clutch fluid.

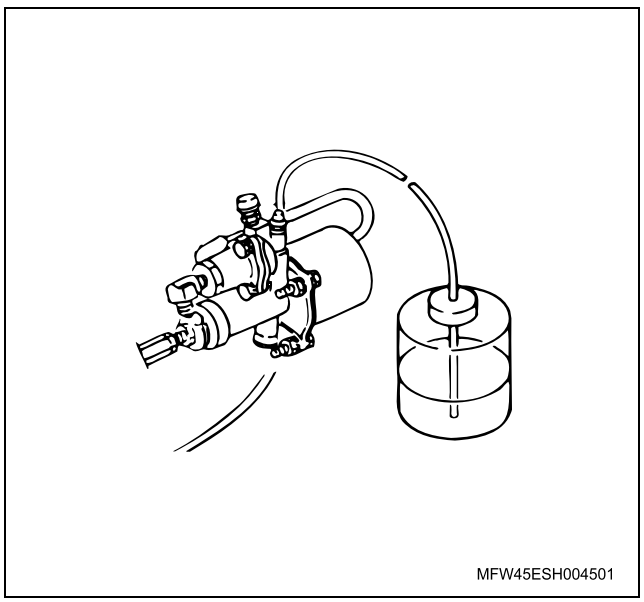
MFW45ESH004501

3. Air removal work
   Fill the cylinder and pipes with clutch fluid.
   a. Loosen the bleeder screw and depress on the clutch pedal repeatedly and tighten the bleeder screw at the location where the pedal is hardest to depress.

CAUTION:
Stop the engine and perform under conditions where the booster does not operate.

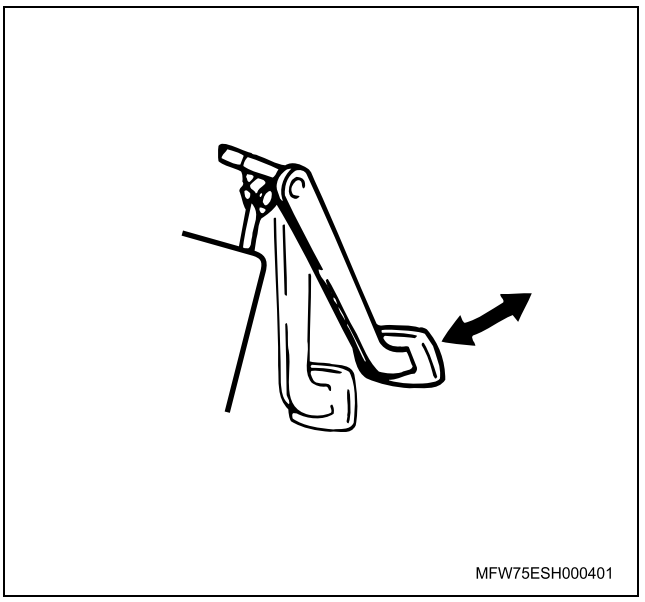
MFW75ESH000401

   b. Remove the air.
   After pressing the pedal repeatedly, in this condition, loosen the bleeder with a half turn to release the air. Tighten the bleeder prior to releasing the pedal.
   Repeat the above procedure until there are no bubbles in the discharged clutch fluid.

CAUTION:
Make sure clutch fluid does not get low during the operation.

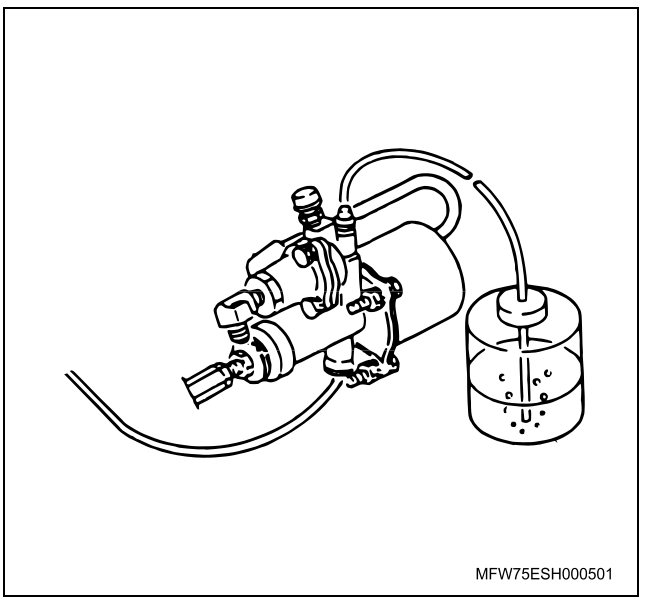
MFW75ESH000501

Disassembly

1. After removing auxiliary components mounted to the transmission and the clutch booster push rod, support and stabilize the transmission using a transmission jack.
2. Remove the flywheel housing installation bolts and pull the transmission toward the rear of the vehicle.

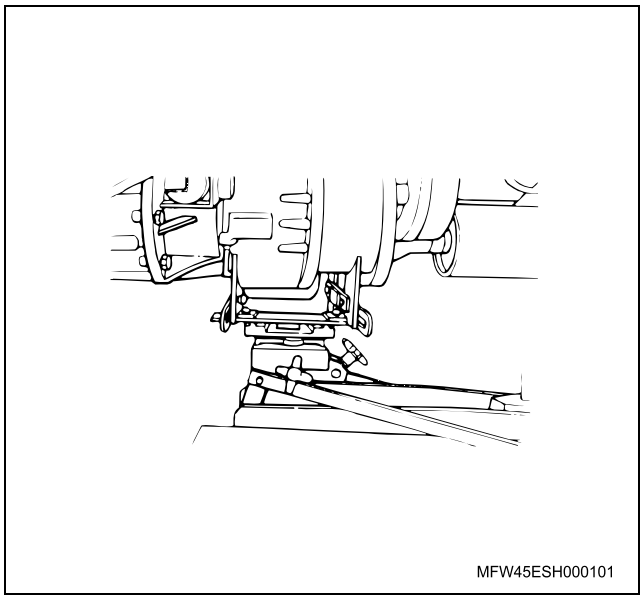

3. Remove the clutch cover ASM.
   - Insert the clutch pilot aligner in the clutch disk. (Prevents dropping of the clutch disk.)

Special Tool

Clutch pilot aligner	
Parts number	Spline small diameter
1-8525-3022-0	35.85 mm (1.4114 in)

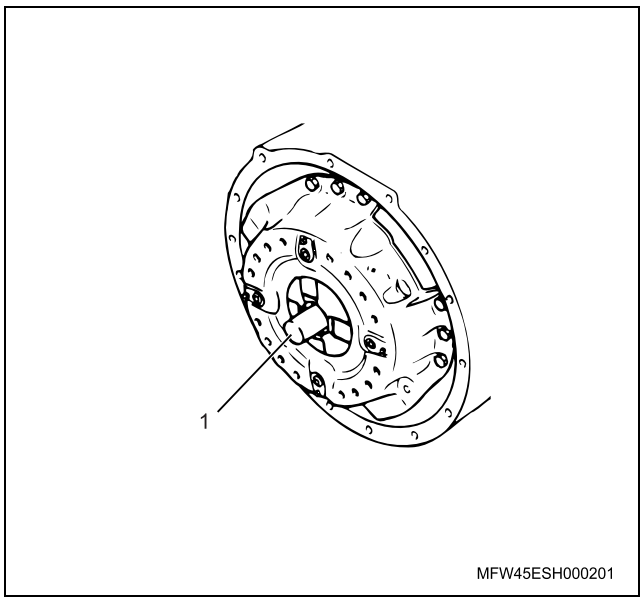

Legend

1. Clutch pilot aligner

- Fix the pressure plate and clutch cover in place in 4 locations using dummy bolts for fixation of the pressure plate, nuts, and washers.

Dummy bolt (1)	M10 × 1.25 L = 150 mm (5.91 in) × 4 pieces

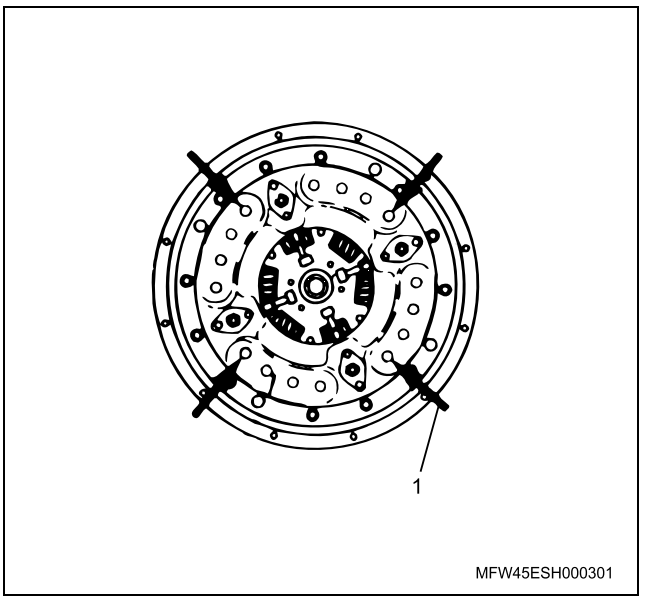

- Remove clutch cover set bolts on diagonal from each other, in order, referring to the diagram.

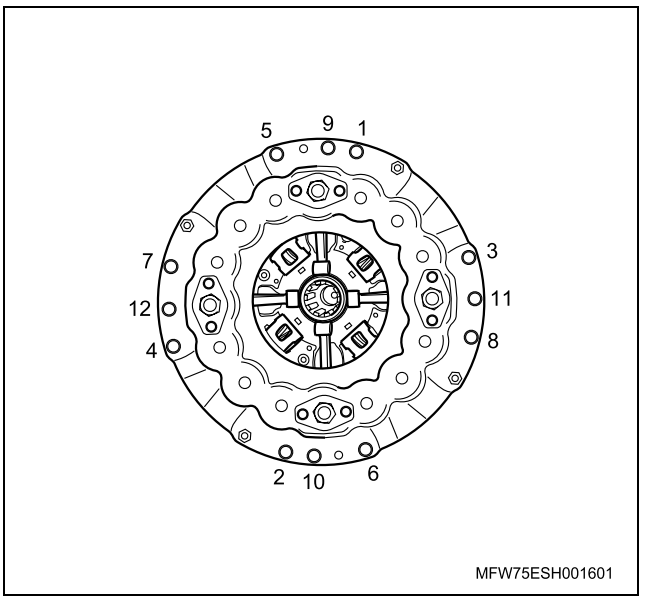

5. Apply a thin layer of grease (ONE LUBER MO No.2 (molybdenum disulfide) or equivalent) to the contact area for the support nut on the clutch cover.

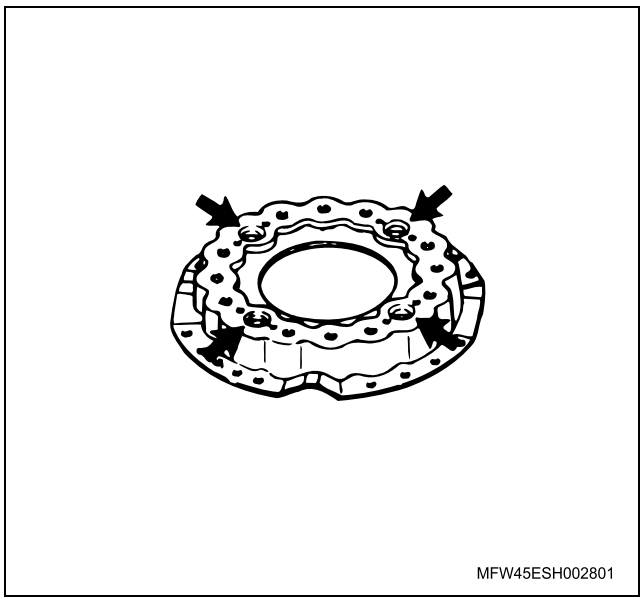
MFW45ESH002801

6. Attach the clutch cover to the pressure plate using a press or a dummy bolt.
   a. Method for using a press
      - Compress the clutch cover with a press until the threaded portion of the lever support protrudes above the upper surface of the cover.
      - Temporarily tighten the support nuts to an equal tightness.

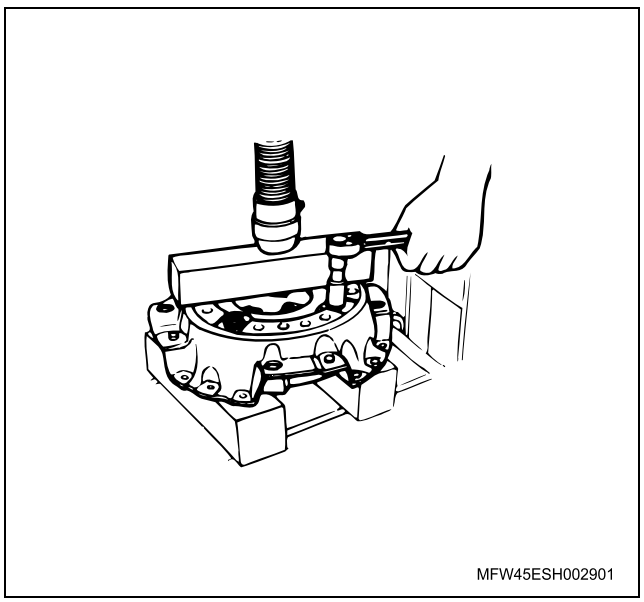
MFW45ESH002901

   b. Method for using a dummy bolt
      - Screw the dummy bolt into the pressure plate.
      - Fix the dummy bolt in place using a wrench and tighten the nut until the threaded portion of the lever support protrudes above the upper surface of the clutch cover.
      - Temporarily tighten the support nuts to an equal tightness.

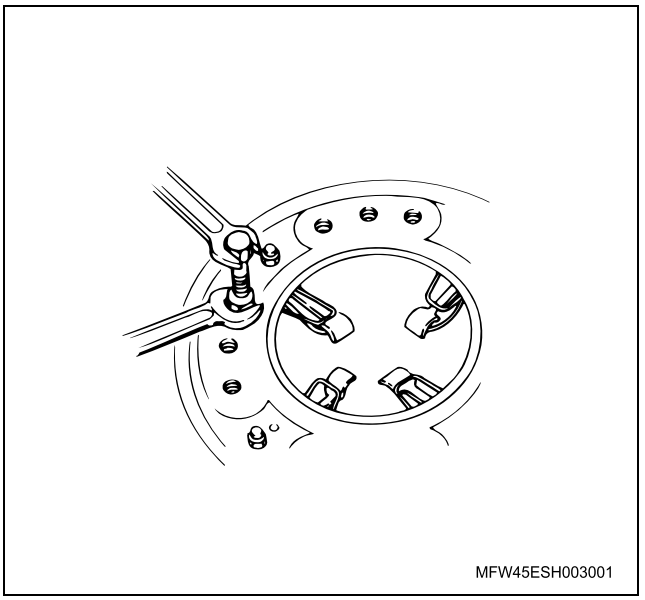
MFW45ESH003001

7. Mount the strap plate to the pressure plate.

Tightening torque	N·m (kg·m / lb·ft)
14, 15 inch	44 (4.5 / 33)

   - For 15 inch clutch: After tightening each bolt at the specified torque, crimp the lock nut on the clutch cover side and bend the lock plate on the pressure plate side.

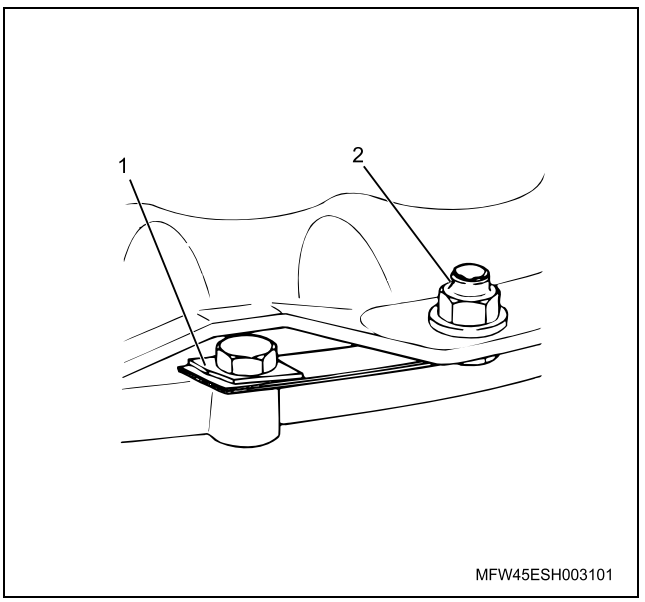

MFW45ESH003101

Legend
1. Lock plate (folding)
2. Lock nut (crimp)

   - For 14 inch clutch: Tighten the pressure plate side using a hexagon socket head bolt.

8. Apply grease (variant grease S or equivalent) to the spline grease groove.
9. Insert the clutch pilot aligner in the clutch disk.

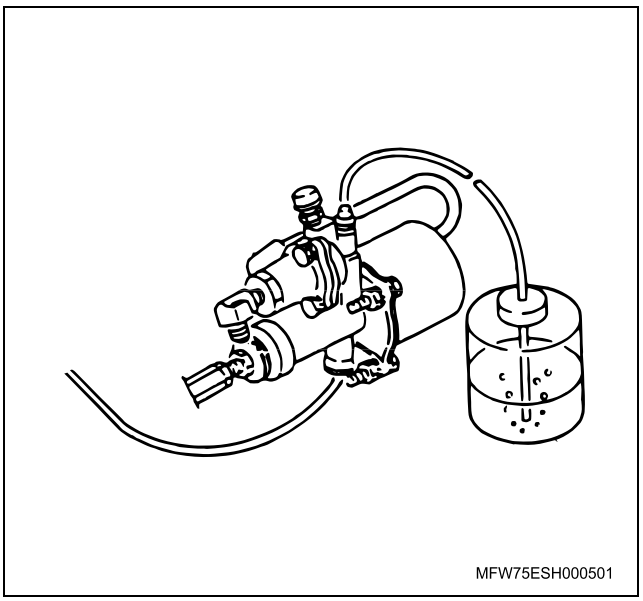

6. Adjust the gap between the piston and push rod.
   - Refer to "Clutch System" in this section.
   - After adjusting, check to make sure that the amount of play in the clutch pedal is within specifications.

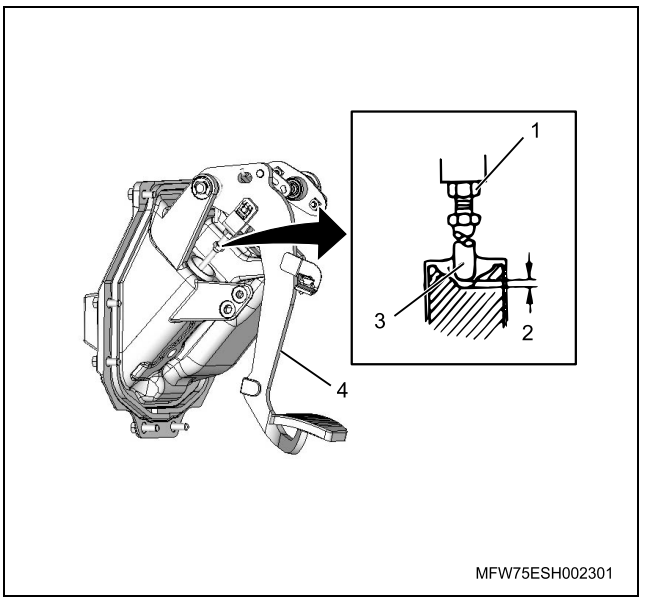

Legend

1. Lock nut
2. Clearance between piston and push rod
3. Push rod
4. Clutch pedal

Primary Specifications

mm (in)	
Item	Dimensions
Cylinder internal diameter	ϕ19.05 (0.7500)
Maximum stroke	38 (1.50)

Maintenance standards table

mm (in)			
Item	Nominal Dimension	Assembly Standard	Limit for use
Piston external diameter	ϕ19.05 (0.7500)	—	ϕ18.96 (0.7464)
Gap between piston and cylinder	—	0.04 - 0.125 (0.0016 - 0.0049)	0.15 (0.0059)

19. Install springs into the intake and exhaust paths at the tip of the cylinder body, apply air master paste to the guard installation groove, and install the guard.

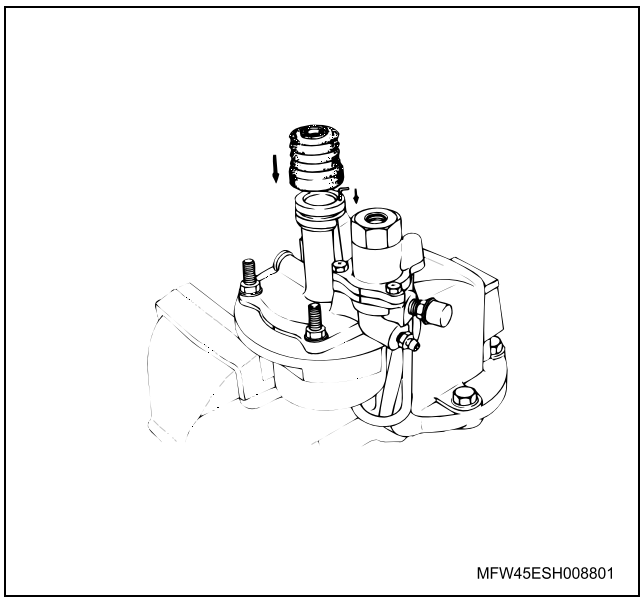

Installation

1. Mount the clutch booster.

Tightening torque		N·m (kg·m / lb·ft)
Transmission - Bracket (installation bolt)	ϕ70	53 (5.4 / 39)
	ϕ90	53 (5.4 / 39)
Clutch Booster - Bracket (installation nut)	ϕ70	26 (2.7 / 20)
	ϕ90	42 (4.3 / 31)

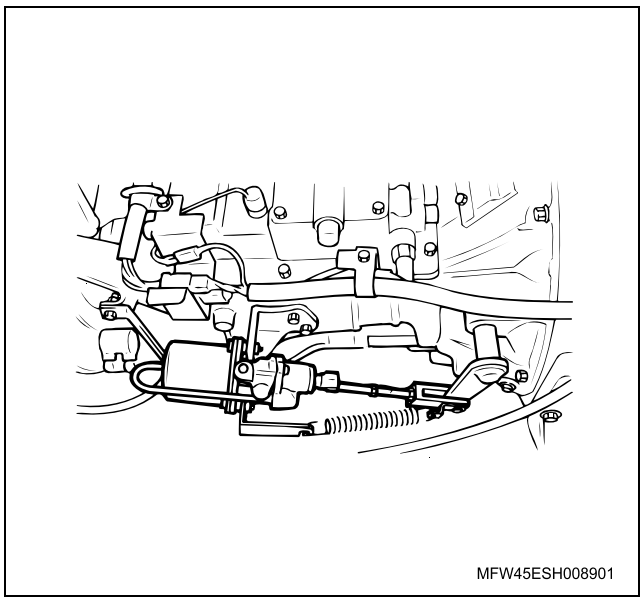

2. Apply grease to the clevis pin and assemble it to the clutch shaft lever.

BESCO L-2, L-3 grease or equivalent

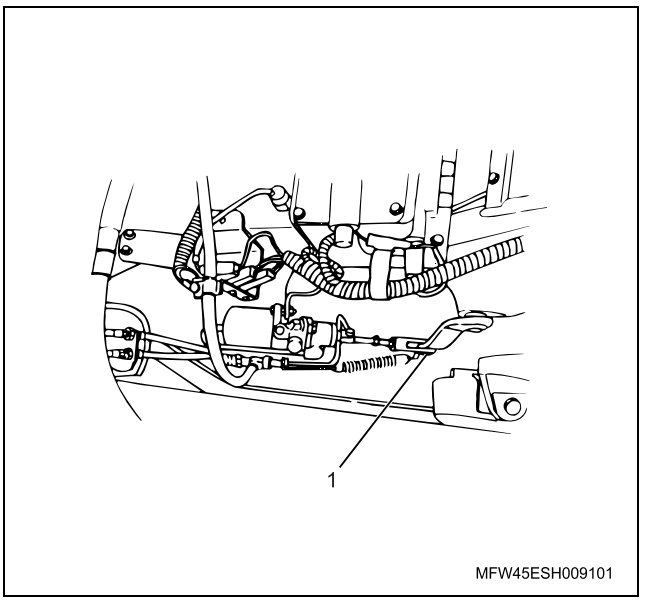

Legend

1. Grease coating

3. Mount the air hoses and oil pipes.
4. Remove air from the clutch system.
   - Refer to "Clutch System" in this section.

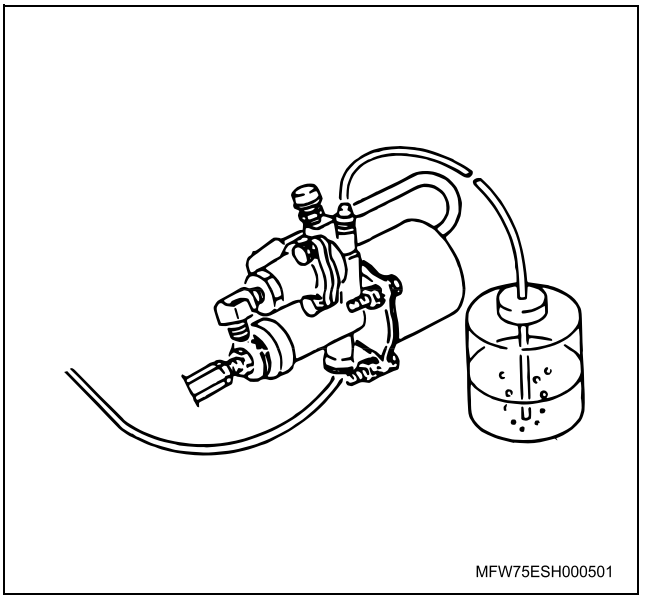

5. Adjust the length of the push rod.
   - Refer to "Clutch System" in this section.

Number of reversing turns of the clutch booster push rod	
Clutch	14, 15 inch
Assembly Standard	2 1/4 - 2 3/4

- Apply gear oil, or BESCO L-2 or BESCO L-3 grease or equivalent to each sliding surface, appropriately as required.

1. Set the output gear inside the case.
2. Install the output shaft from the front side of the case.
3. Install the bearings (2 pieces).
4. Install the cover.
   - Apply LOCTITE 5127 or equivalent to the cover and tighten it with bolts.

Tightening torque 25 N·m (2.5 kg·m / 18 lb·ft)

5. Select an output shim(s) (1 - 4 pieces) that satisfies any of following specifications.
   - The gap of the output bearing (thrust direction) is 0.4 mm (0.016 in) or less
   - The output axis starting torque is 1.17 N·m (0.119 kg·m / 10.36 in·ft) or less

Thickness of selectable shim						mm (in)
0.10 (0.0039)	0.15 (0.0059)	0.20 (0.0079)	0.40 (0.0157)	0.65 (0.0256)	0.80 (0.0315)	1.00 (0.0394)

6. Install the oil seal.
   - Apply gear oil to the outer circumference of the oil seal.
   - Orient the lip area towards the inside, and insert until it reaches the same surface as the surface of the seal cover while making sure that distortion does not occur. Then, apply a thin layer of grease (BESCO L-2 or BESCO L-3 grease or equivalent) to the inside surface of the lip area.

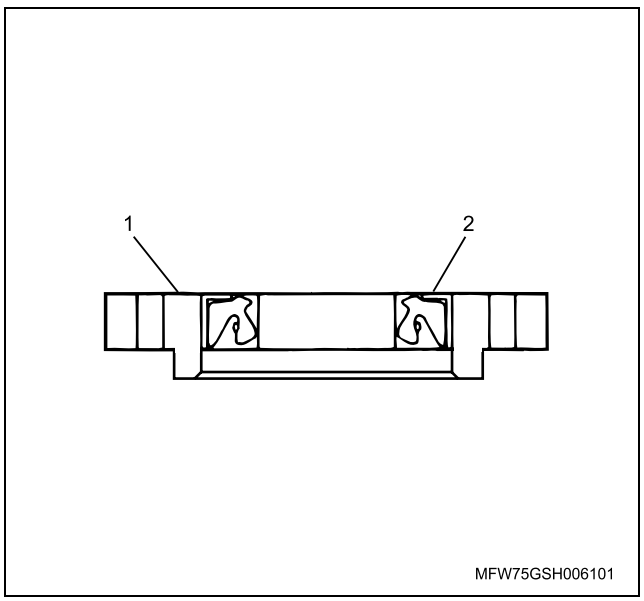

Legend
1. Seal cover
2. Oil seal

7. Install the seal cover.
   - Apply LOCTITE 5127 or equivalent to the seal cover and tighten it with bolts.

Tightening torque 25 N·m (2.5 kg·m / 18 lb·ft)

8. Install the key.
9. Install the dowel pin.
10. Install the distance collar.
11. Install the return spring.
12. Attach the O-ring to the shift rod.
    - Apply BESCO L-2 grease or equivalent to the O-ring.
13. Install the shift rod.
    - While inserting the shift rod, assemble the shift arm.
14. Install the spring pin.
    - Fix the shift arm with the spring pin.
15. Install the plug.
    - Apply LOCTITE 962T or equivalent to the outer circumference of the plug, and tap the plug until it reaches the same surface as the case while making sure that distortion does not occur.
16. Install the shift plug.
    - Apply LOCTITE 962T or equivalent to the cover, and tap it while making sure that distortion does not occur.
17. Apply LOCTITE 5127 or equivalent to the air cylinder and tighten it with bolts.
    - Apply BESCO L-2 grease or equivalent to the inner circumference of the cylinder.

Tightening torque 25 N·m (2.5 kg·m / 18 lb·ft)

18. Install the air connector.
    - Apply LOCTITE 242 or equivalent to the tapered threaded portion and install.

Tightening torque 22 N·m (2.2 kg·m / 16 lb·ft)