WORKSHOP MANUAL

INDEX: ENGINE GROUP 1/2

GENERAL INTRODUCTION

ENGINE INTRODUCTION

ENGINE MECHANICAL

AIR INTAKE SYSTEM

EXHAUST SYSTEM

LUBRICATING SYSTEM

COOLING SYSTEM

FUEL SYSTEM

TURBOCHARGER

FUEL INJECTION PUMP

EMISSION CONTROL

ALTERNATOR

STARTER

AIR COMPRESSOR

ENGINE PTO
(POWER TAKE-OFF)

ENGINE RETARDER

ENGINE CONTROL

INDEX: ENGINE GROUP 2/2

ENGINE CONTROL

FUEL CONTROL

BRAKE CONTROL

SUSPENSION CONTROL

CAB EQUIPMENT CONTROL

OTHERS

SPECIFIED TORQUE FOR STANDARD BOLTS AND NUTS

M00010101BEC1004

1. FLANGE BOLT

Unit: N·m {kgf·cm, lbf·ft}

Class	7T	9T
Representation Diameter x Pitch	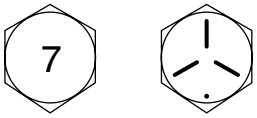	
M8 x 1.25	28.5 {290, 21.0}	36 {370, 26.8}
M10 x 1.25	60 {610, 44.1}	74.5 {760, 55.0}
M10 x 1.5	55 {560, 40.5}	68.5 {700, 50.6}
M12 x 1.25	108 {1,100, 79.6}	136 {1.390, 100.5}
M12 x 1.75	97 {990, 71.6}	125 {1,280, 92.6}
M14 x 1.5	171.5 {1,750, 126.6}	216 {2,210, 159.8}
M14 x 2	154 {1,570, 113.6}	199 {2.030, 146.8}

2. BOLT WITH WASHER

Unit: N·m {kgf·cm, lbf·ft}

Class	4T	7T	9T
Representation Diameter x Pitch	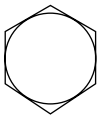 No Mark	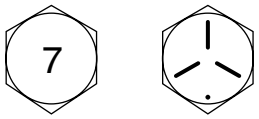	
M6 x 1	6 {60, 4.3}	10 {100, 7.2}	13 {130, 9.4}
M8 x 1.25	14 {140, 10.1}	25 {250, 18.1}	31 {320, 23.1}
M10 x 1.25	29 {300, 21.7}	51 {520, 37.6}	64 {650, 47.0}
M10 x 1.5	26 {270, 19.5}	47 {480, 34.7}	59 {600, 43.4}
M12 x 1.25	54 {550, 39.8}	93 {950, 68.7}	118 {1,200, 86.8}
M12 x 1.75	49 {500, 36.2}	83 {850, 61.5}	108 {1,100, 79.6}
M14 x 1.5	83 {850, 61.5}	147 {1,500, 108.5}	186 {1,900, 137.4}
M14 x 2	74 {750, 54.2}	132 {1,350, 97.6}	172 {1,750, 126.6}

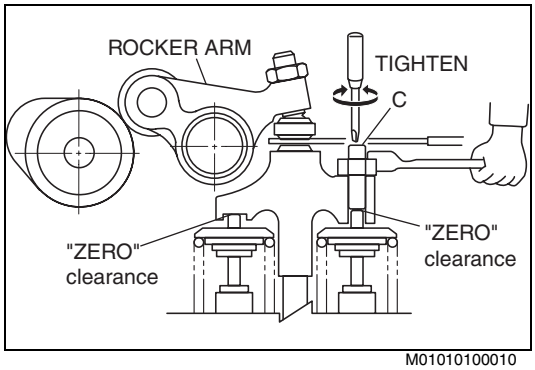

M01010100010

(6) Tighten the adjusting screw C of the cross head until the feeler gauge does not move.

NOTICE:
In this situation, clearance between adjusting screw C and valve stem head is zero.

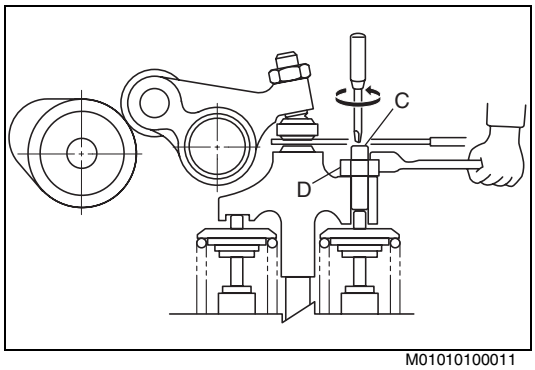

M01010100011

(7) While loosening the adjusting screw C of the cross head gradually, adjust the valve clearance. Tighten the lock nut D of the cross head securely with the specified tightening torque when the feeler gauge feels correct.
Tightening Torque:
25 N·m {250 kgf·cm, 18 lbf·ft}

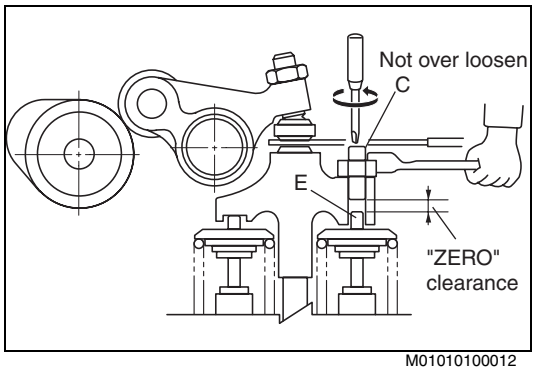

M01010100012

NOTICE:
- **Do not over loosen the adjusting screw.**
- **Over loosening of the adjusting screw C will cause the same condition as in step (3) again. The feeler gauge may feel correct, but there may be excessive clearance between the adjusting screw C of the cross head and the valve stem head E. This does not allow for correct adjustment.**

(8) Positioning each piston at Top Dead Center of compression stroke by turning the crankshaft counterclockwise view from flywheel side. Then adjust the valve clearance for each cylinder in the firing order.

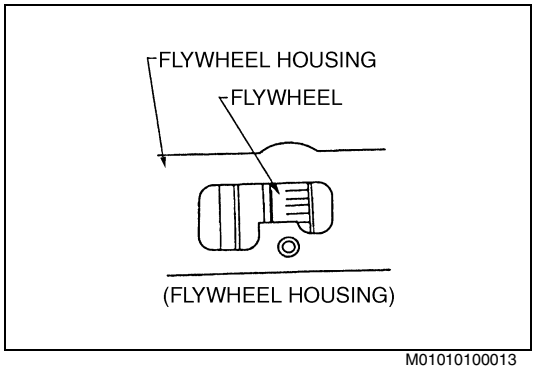

M01010100013

INJECTION TIMING ADJUSTING PROCEDURES

1. INSPECT THE INJECTION TIMING.

(1) Turn the crankshaft clockwise (viewed from the timing gear side) to align the timing mark on the outer periphery of the flywheel at (A°) before Top Dead Center of the compression stroke with the pointer of the flywheel housing.
Injection timing (A°):Refer to section "DATA AND SPECIFICATION".

(2) Check that the injection timing mark on the automatic timer is aligned with the pointer of the pump.
If not, adjust the injection timing as on the following page.

No.	Part name	Application position and pattern	Application width	Gasket to be used	Remarks
8	Front and rear ends of upper/ lower faces of block	**Matching parts of block upper face rear end, gasket, rear end plate, flywheel housing, cylinder head gasket** **Matching parts of oil seal retainer and block lower face front end** **Matching parts of block lower front end, gasket, rear end plate and flywheel housing** 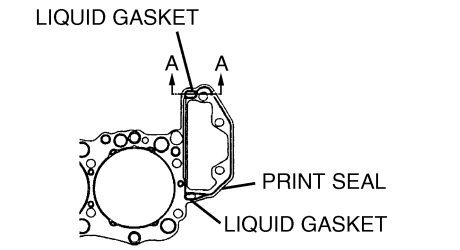 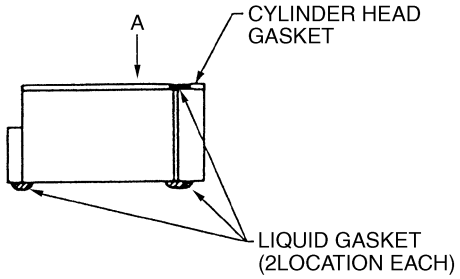 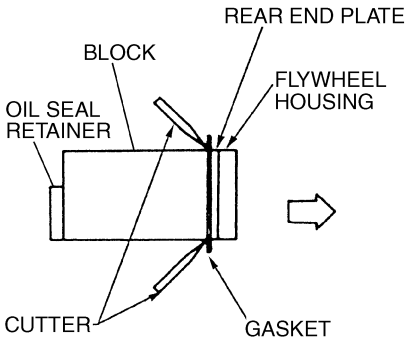 **NOTICE:** **Cut the rear end plate gasket with a craft knife flush with the block upper face.**	— 1.5-2.5 {0.0591-0.0984} 1.5-2.5 {0.0591-0.0984}	White Black Silver	
9	Flywheel housing	**Matching face of rear end plate** 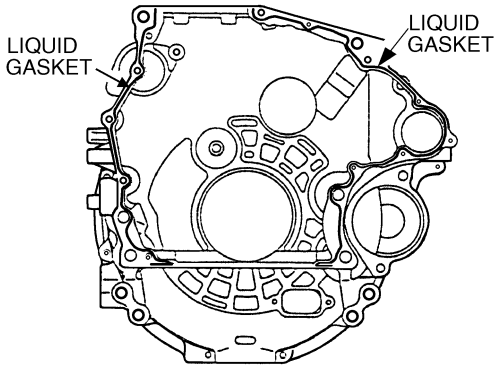	1.5-2.5 {0.0591-0.0984}	Silver	

Inspection item		Standard	Limit	Remedy	Inspection procedure
Outer valve spring	Setting load	314 N {32.0 kgf, 70.5 lbf} at 46.8 {1.843}	291.8 N {29.8 kgf, 65.6 lbf}	Replace.	Measure 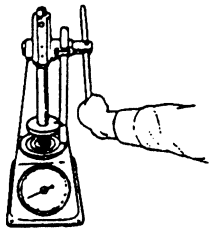 Setting road 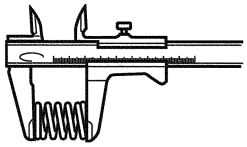 Free length 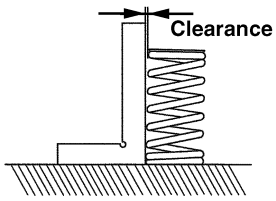 Squareness
	Free length (reference value)	75.7 {2.980}	72.7 {2.862}	Replace.	
	Squareness	—	2.6 {0.1023} (2.0°)	Replace.	
Inner valve spring	Setting load	129 N {13.2 kgf, 29.1 lbf} at 44.8 {1.764}	119.5 N {12.2 kgf, 26.9 lbf}	Replace.	
	Free length (reference value)	64.6 {2.543}	61.6 {2.425}	Replace.	
	Squareness	—	2.3 {0.0905} (2.0°)	Replace.	
Wear and damage of valve spring seat upper and lower		—	—	Replace.	Visual check 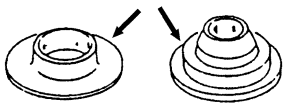
Nozzle protrusion		2.25-2.75 {0.0886-0.1083}	—	Replace nozzle seat.	Measure 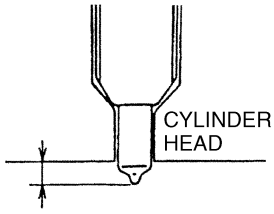
Cylinder head lower surface flatness		0.06 or less {0.0024 or less} for longitudinal direction	0.20 {0.0078}	Replace. NOTICE: Do not grind for repair.	Measure 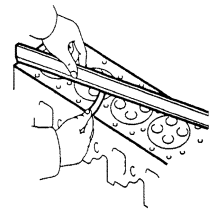 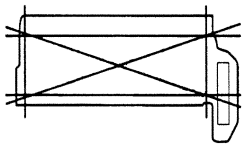
		0.03 or less {0.0012 or less} for lateral direction			

Inspection item		Standard	Limit	Remedy	Inspection procedure
Main idle shaft	Shaft outside diameter	57 {2.244}	—	—	Measure 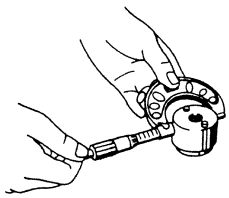 Outside diameter
	Bushing inside diameter	57 {2.244}	—	—	
	Clearance	0.030-0.090 {0.0012-0.0035}	0.20 {0.0079}	Replace gear and/or shaft.	
	Gear width	44 {1.732}	—		
	Shaft length	44 {1.732}	—		
	End play	0.114-0.160 {0.0045-0.0062}	0.30 {0.0118}	Replace gear and/or shaft.	
Sub idle shaft	Shaft outside diameter	50 {1.969}	—		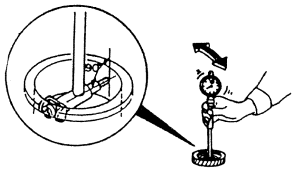 Inside diameter
	Bushing inside diameter	50 {1.969}	—		
	Clearance	0.025-0.075 {0.0010-0.0029}	0.20 {0.0079}	Replace gear and/or shaft.	
	Gear width	22 {0.866}	—		
	Shaft length	22 {0.866}	—		
	End play	0.040-0.095 {0.0016-0.0037}	0.30 {0.0118}	Replace gear and/or shaft.	
Cam idle shaft	Shaft outside diameter	34 {1.339}	—		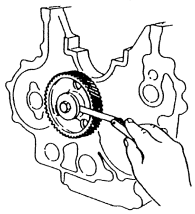 End play
	Bushing inside diameter	34 {1.339}	—		
	Clearance	0.025-0.075 {0.0010-0.0029}	0.20 {0.0079}	Replace gear and/or shaft.	
	Gear width	22 {0.866}	—		
	Shaft length	22 {0.866}	—		
	End play	0.040-0.095 {0.0016-0.0037}	0.30 {0.0118}	Replace gear and/or shaft.	

OVERHAUL

M01050201BEH2001

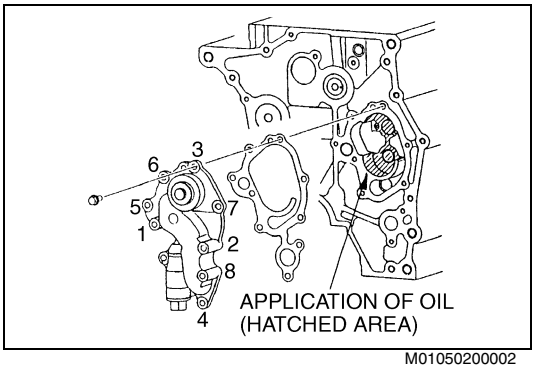

M01050200002

IMPORTANT POINTS - ASSEMBLY

1. INSTALLING THE OIL PUMP.

(1) Apply oil to the pump case and bearings of the block (hatched area) before installing the oil pump.

NOTICE:
Not applying oil may cause oil suction failure at start-up, resulting in seizure and abnormality.

(2) To prevent misalignment of the gasket, apply grease to the gasket matching face of the block. Then, place and fix the gasket.

(3) Tighten the oil pump mounting bolts provisionally in the order as shown in the figure. Tighten them to the specified torque.

INSPECTION AND REPAIR

M01050201BEH3001

Unit: mm {in.}

Inspection item		Standard	Limit	Remedy	Inspection procedure
Gear outside diameter		54 {2.126}	—	—	Measure 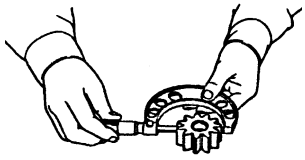
Block side pump body inside diameter		54 {2.126}	—	—	
Tip clearance		0.100-0.202 {0.004-0.0079}	0.30 {0.0118}	Replace gear or pump.	
Gear width		37.5 {1.476}	—	—	Measure 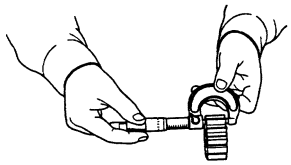
Block side pump body inside depth		37.5 {1.476}	—	—	
End play		0.049-0.113 {0.0020-0.0044}	0.15 {0.0059}	Replace gear or pump.	
Drive gear	Shaft outside diameter	18 {0.709}	—	—	Measure 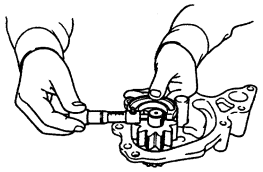
	Block side bushing inside diameter	18 {0.709}	—	—	
	Clearance	0.040-0.099 {0.0016-0.0038}	—		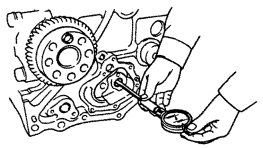

SPECIAL TOOL

M01060201BEK1001

Prior to starting an engine overhaul, it is necessary to have these special tools.

Illustration	Part number	Tool name	Remarks
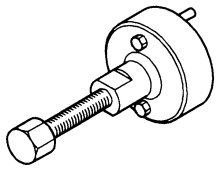	09420-1810	PULLER	
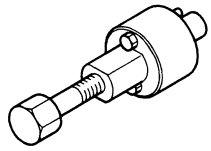	09420-1820	PULLER	

OVERHAUL

M01060201BEH2001

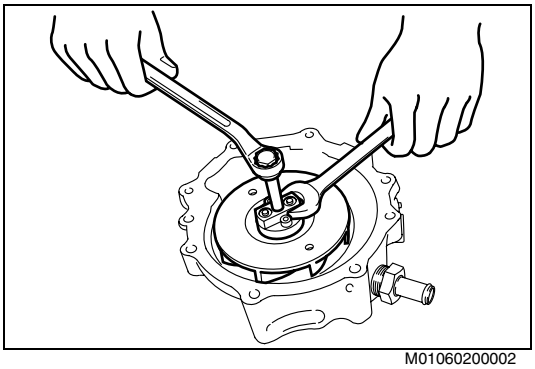

M01060200002

IMPORTANT POINTS - DISASSEMBLY

1. DISASSEMBLE THE COOLANT PUMP.

(1) Remove the vane from the shaft using the special tool.
SST: Puller (09420 - 1820)

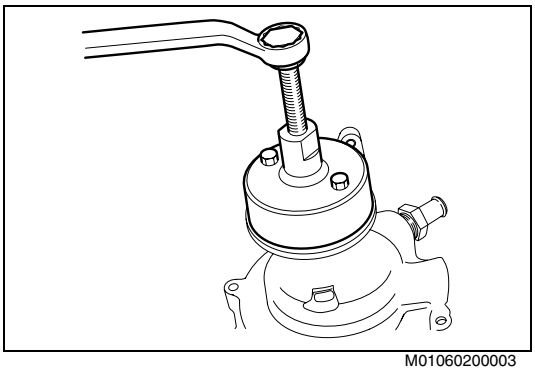

M01060200003

(2) Remove the pulley center from the shaft using the special tool.
SST: Puller (09420 - 1810)

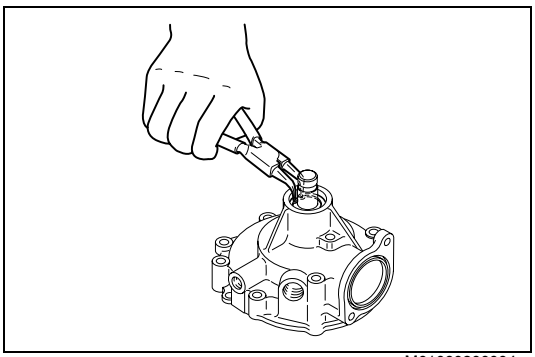

M01060200004

(3) Remove the retainer ring from the pump case using snap ring pliers.

INJECTION NOZZLE(TWO-SPRING TYPE - BOSCH MAKE)

DESCRIPTION

M01070201BEC1002

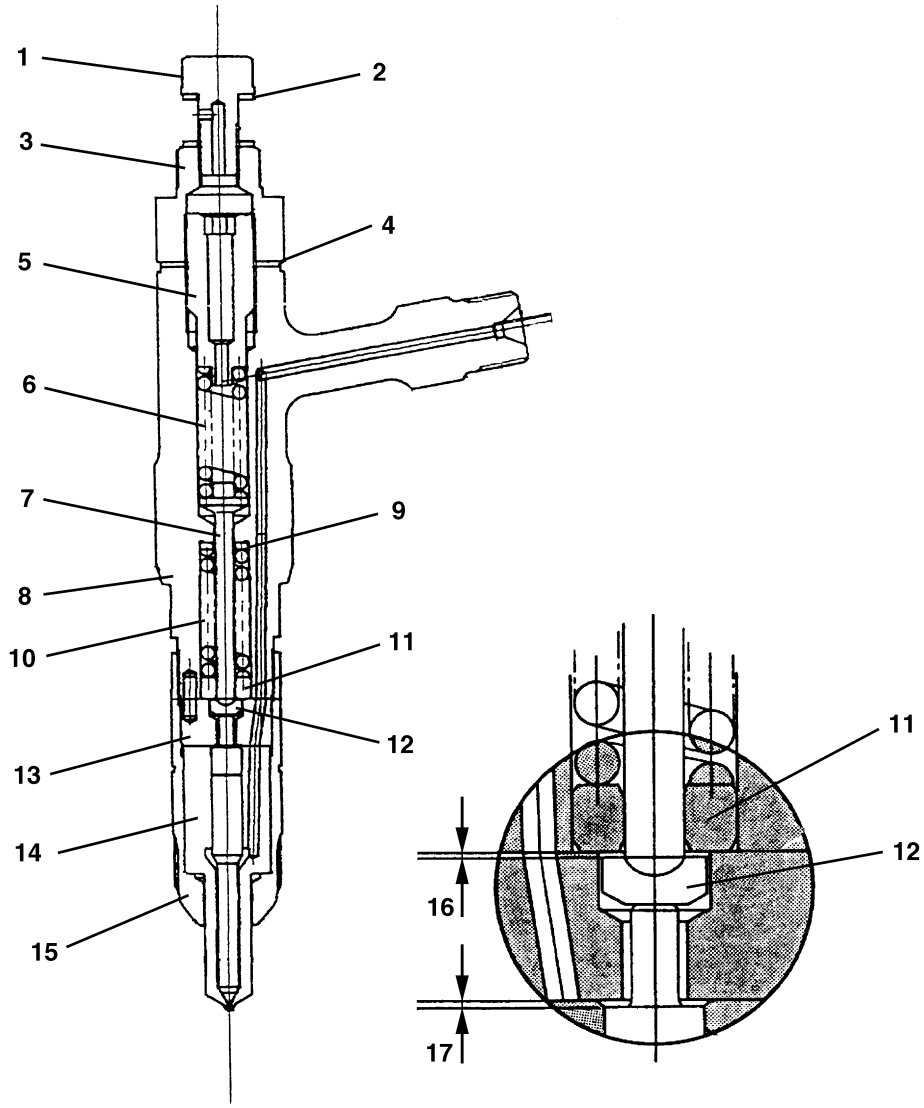

M01070200026

1	Joint bolt	10	Second pressure spring
2	Gasket	11	Second pressure spring seat
3	Cap nut	12	Lift piece
4	Gasket	13	Spacer
5	Adjusting screw	14	Nozzle assembly
6	First pressure spring	15	Retaining nut
7	Push rod	16	Pre lift (L')
8	Nozzle holder	17	Valve lift (L)
9	Second pressure adjusting shim		

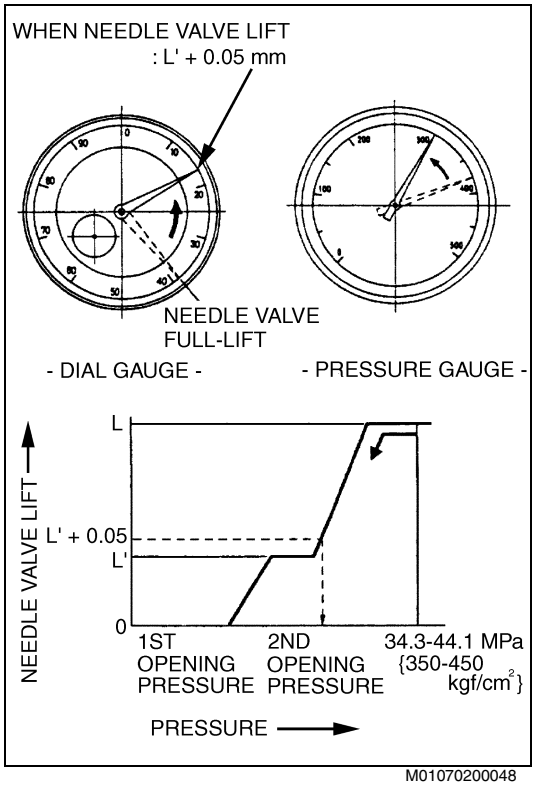

M01070200048

(3) Read the value indicated on the pressure gauge at the instant the dial gauge needle indicates the specified needle valve lift value (pre-lift " L' " + 0.05 mm {0.0020 in.}).

Second opening pressure

With new parts : 22.1-23.1 MPa {225-235 kgf/cm^2, 3,200-3,341 lbf/in.^{2}}

With reused parts : 21.6-22.6 MPa {220-230 kgf/cm^2, 3,129-3,270 lbf/in.^{2}}

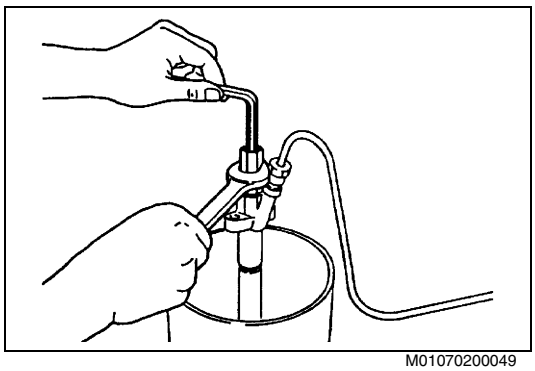
M01070200049

5. ADJUSTING OF THE SECOND OPENING PRESSURE (WORK STEP 5.)

(1) If the second opening pressure deviates from the specified value, and the amount of that deviation is small, readjust the first opening pressure within the specified value.

NOTICE:

- **If the second opening pressure is lower than the specified value, reasjust the first opening pressure to maximum specified value, then measure the second opening pressure.**
- **If the second opening pressure is higher than the specified value, readjust the first opening pressure to minimum specified value.**

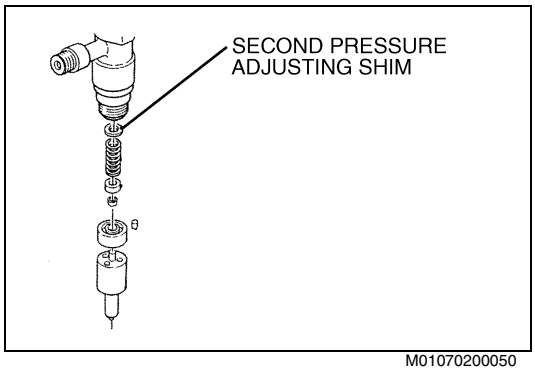

M01070200050

(2) If the first oepning pressure has been readjusted and the second opening pressure still deviates from the specified value, disassemble the nozzle side of the nozzle holder and remove the adjusting shim.

(3) If the second opening pressure is higher than the specified value, replace the adjusting shim with a thinner one.

(4) After replacing the adjusting shim, remeasure the second opening pressure, and adjust the pressure until it comes to the specified value.

Second opening pressure adjusting shim line-up Unit = mm {in.}

Parts number	Shim thickness
22882-2850	0.40 {0.0157}
22882-2860	0.50 {0.0197}
22882-2870	0.52 {0.0205}
22882-2880	0.54 {0.0213}
22882-2890	0.56 {0.0220}
22882-2900	0.58 {0.0228}
22882-2910	0.60 {0.0236}
22882-2920	0.70 {0.0276}

8. Table 1-8. Troubleshooting - Turbocharger Bearings, Bores, or Journals are Worn

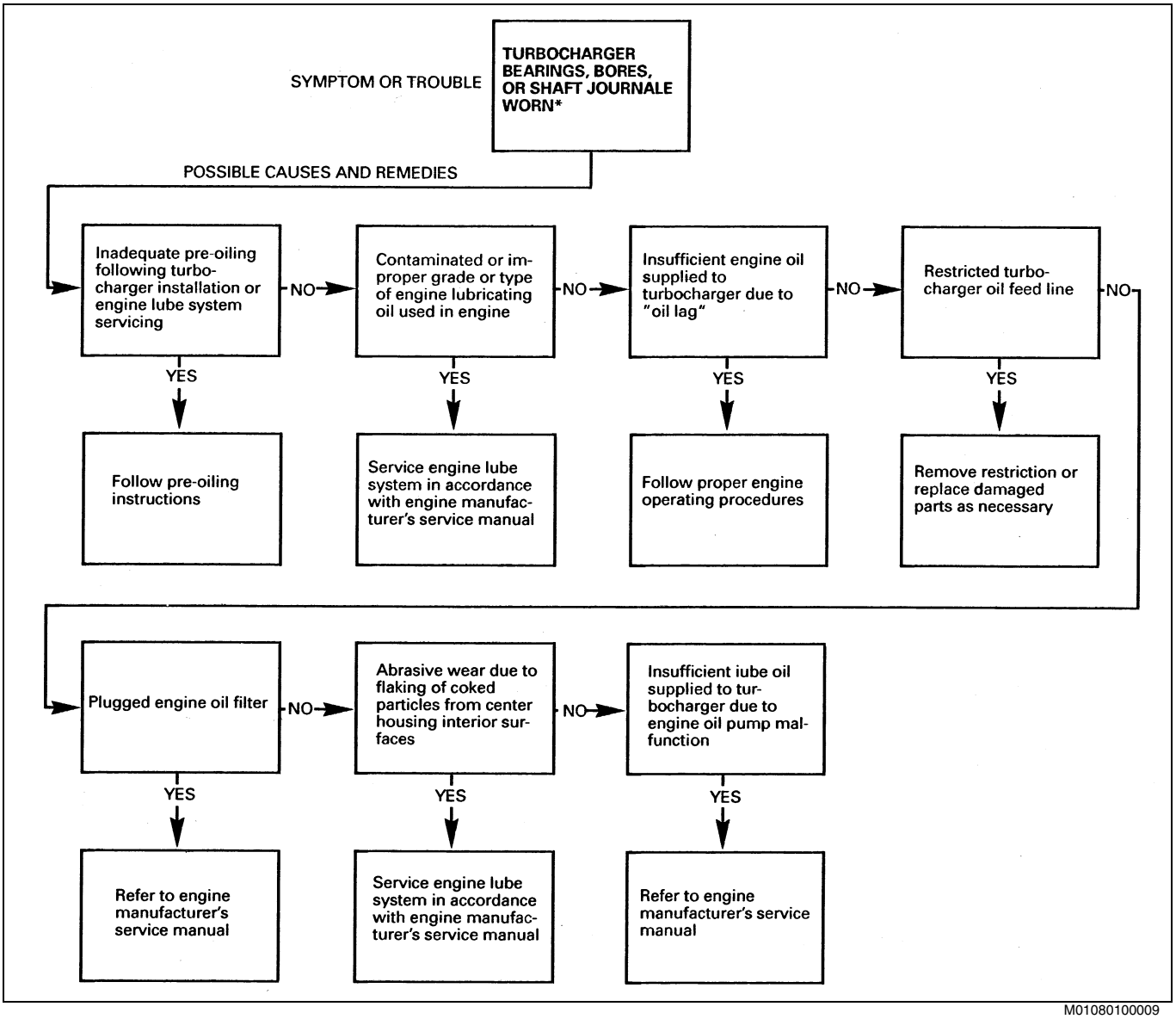

M01080100009

***Overhaul turbocharger, then use this table to determine cause of failure.**

(5) Release the air pressure at the sensing port. Note that the dial gauge pointer returns exactly to zero.
(6) Repeat steps (4) through (5) several times to make sure that wastegate valve or rod movement has been accurately measured.
(7) If the specified value or rod movement cannot be obtained within the specified air pressure range.The turbine housing assembly or actuator assembly must be replaced.

NOTICE:
Operation of the engine with the wastegate calibrated to some value other than that specified can result in reduced performance or severe engine damage.

(8) If wastegate performance is within specification, install the hose onto the wastegate sensing port.

COMPONENT LOCATOR

M01080101BED1001

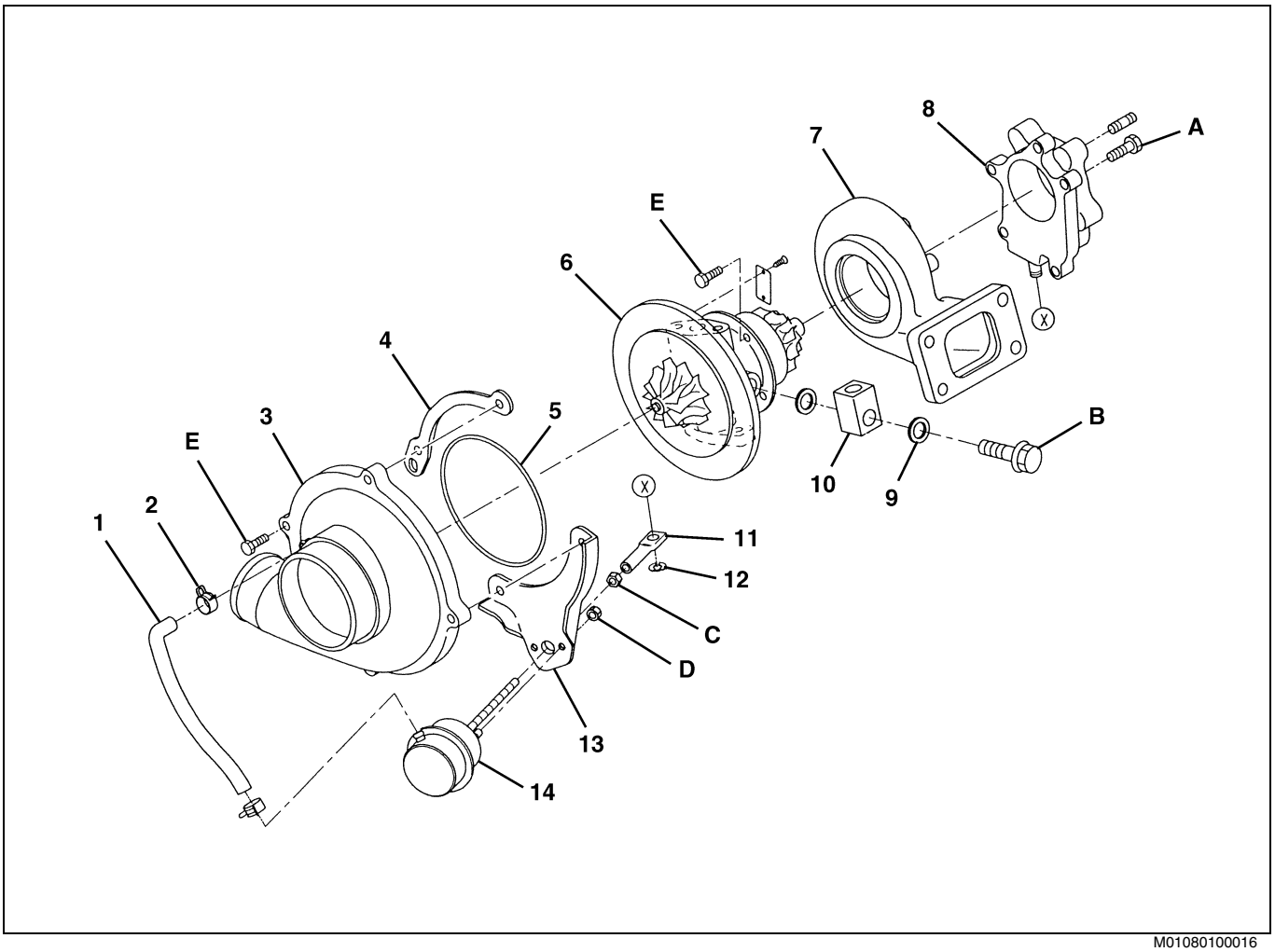

M01080100016

1	Air hose	8	Elbow assembly
2	Clamp	9	Gasket
3	Compressor housing	10	Connector pipe
4	Clamp	11	Rod end
5	O-ring	12	Retaining ring
6	Bearing with turbine and blower case	13	Bracket
7	Turbine housing	14	Acutuator assembly

Tightening torque **Unit: N·m {kgf·cm, lbf·ft}**

A	20.3-22.5 {207-229, 15-16}	D	5.7-7.9 {59-80, 4.3-5.7}
B	44.1-49.0 {450-499, 33-50}	E	20.9-24.3 {214-247, 16-17}
C	9.0-13.6 {92-138, 6.7-10.0}		

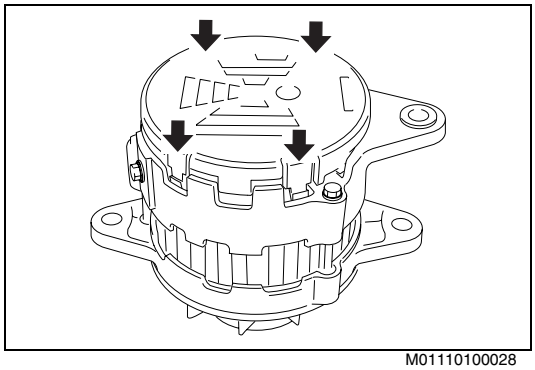
M01110100028

(2) Install the cover.

PERFORMANCE TEST

NOTICE:

- **Note the battery polarity carefully so as not to make reverse connections.**
  If the connections are reversed, the diodes will short the circuit and allow a large current to flow through and damage the diodes and I.C. regulator as well as burning the wiring harness.
- **Take care not to make wrong connections of terminals.**
- **When charging the battery with a quick charge, disconnect the battery terminals.**
- **Do not perform tests with high voltage insulation resistance tester.**
- **In operation, never disconnect the battery.**

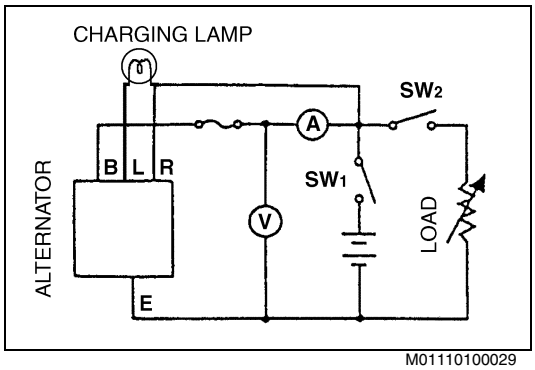

M01110100029

1. ALTERNATOR PERFORMANCE TEST

(1) Turn switch SW1 on and SW2 off to increase the revolution of the alternator slowly.

(2) When voltage reaches 28V, turn on switch SW2 to regulate load resistance. Increase the revolution of the rotor keeping voltage at 28V.

Standard output speed: 4,000 r/min at 27.5V 50A

2. VOLTAGE REGULATOR TEST

(1) Turn switch SW1 on and SW2 off to increase the revolution of the rotor to 5,000 r/min.

Standard voltage: 28.0-29.0V

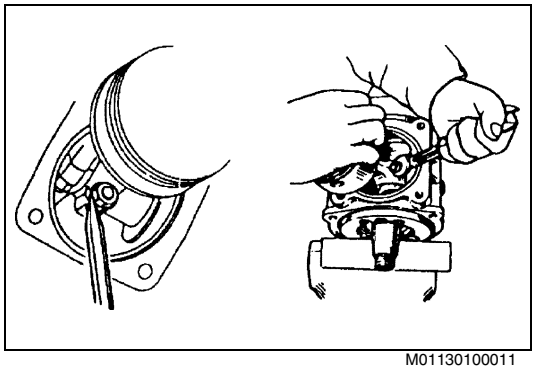
M01130100011

3. REMOVE THE CONNECTING ROD WITH THE PISTON.
(1) Rotate the crankshaft to the top dead center position.
(2) Spread the staking of the nut completely with a chiesel, then loosen the nut.
(3) Remove the connecting rod with piston.

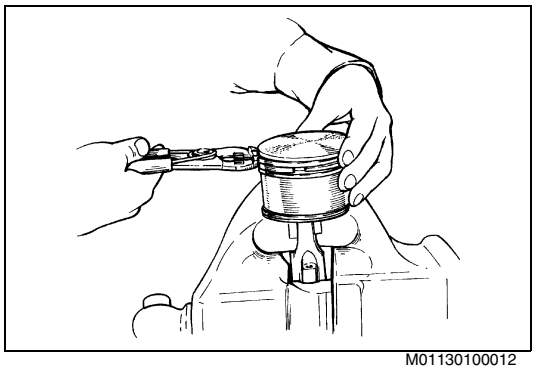
M01130100012

4. REMOVE THE PISTON RINGS.
(1) Remove the piston rings.
SST: Piston ring expander (09440-1060)

NOTICE:
- **Handle the piston rings carefully because they are made of a special casting which is easily broken.**
- **When reusing the piston rings, first arrange them face up and in the correct installation sequence in order to prevent installing them incorrectly.**

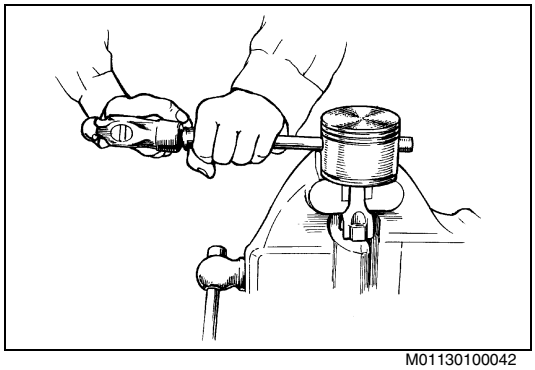
M01130100042

5. REMOVE THE PISTON.
(1) Remove the retainer rings installed on both ends of the piston, using retainer ring pliers.

CAUTION:
Wear a pair of safety goggles, because the retainer rings may spring out the groove at the time of removal.

(2) Strike out the piston pin.

NOTICE:
Warm up the piston first in hot water, 80-90°C {176-194°F}, for approximately 5 minutes before removing the piston pin.

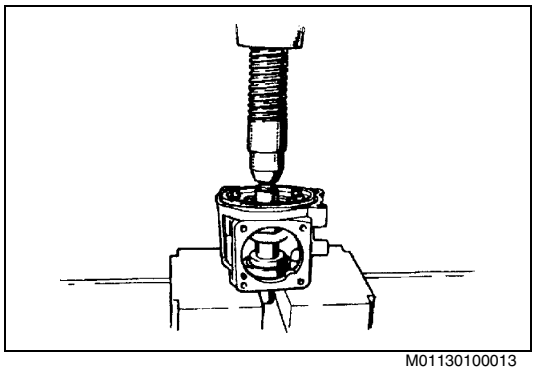
M01130100013

6. REMOVE THE CRANKSHAFT.
(1) Remove the bearing holder fitting bolts.
(2) Using a press, remove the crankshaft with bearing holder.
(3) Using a plastic hammer, strike out the bearing holder from the crankshaft.