FUNDAMENTAL PROCEDURES

C3U000000004A01

Preparation of Tools and Measuring Equipment

- Be sure that all necessary tools and measuring equipment are available before starting any work.

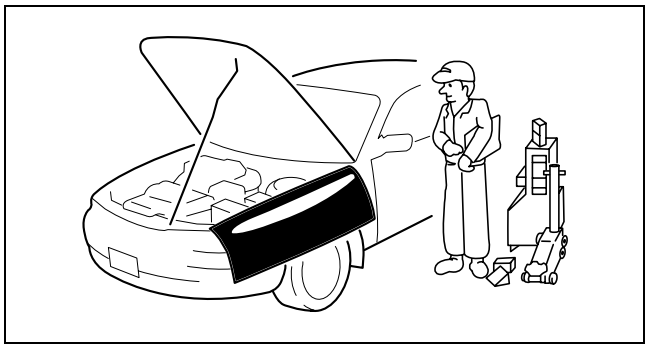

CHU0014W003

Special Service Tools

- Use special service tools or equivalent when they are required.

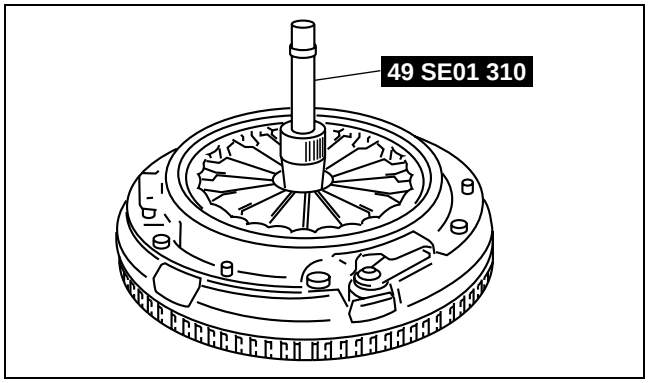

WGIWXX0024E

Disassembly

- If the disassembly procedure is complex, requiring many parts to be disassembled, all parts should be marked in a place that will not affect their performance or external appearance and identified so that reassembly can be performed easily and efficiently.

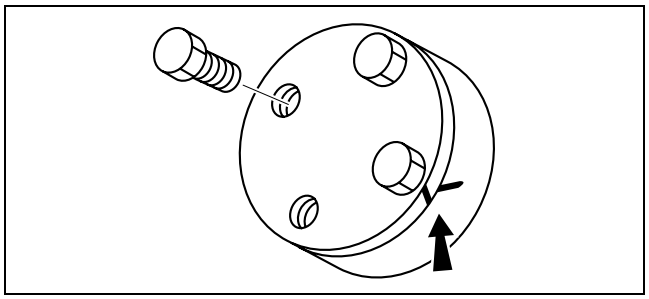

WGIWXX0027E

Inspection During Removal, Disassembly

- When removed, each part should be carefully inspected for malfunction, deformation, damage and other problems.

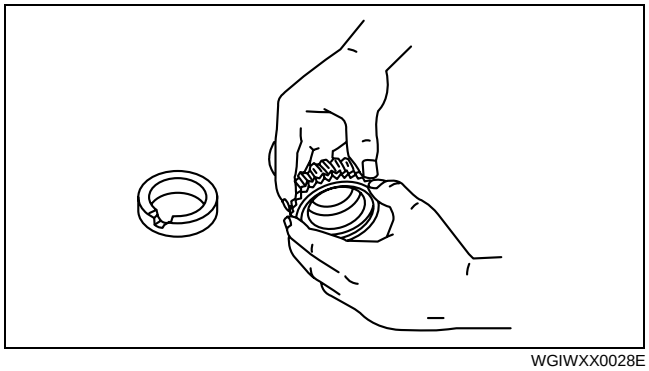

WGIWXX0028E

NEW STANDARDS

C3U000000020A01

- Following is a comparison of the previous standard and the new standard.

New Standard		Previous Standard		Remark
Abbreviation	Name	Abbreviation	Name	
AP	Accelerator Pedal	—	Accelerator Pedal	
ACL	Air Cleaner	—	Air Cleaner	
A/C	Air Conditioning	—	Air Conditioning	
BARO	Barometric Pressure	—	Atmospheric Pressure	
B+	Battery Positive Voltage	Vb	Battery Voltage	
—	Brake Switch	—	Stoplight Switch	
—	Calibration Resistor	—	Corrected Resistance	#6
CMP sensor	Camshaft Position Sensor	—	Crank Angle Sensor	
CAC	Charge Air Cooler	—	Intercooler	
CLS	Closed Loop System	—	Feedback System	
CTP	Closed Throttle Position	—	Fully Closed	
CPP	Clutch Pedal Position	—	Idle Switch	
CIS	Continuous Fuel Injection System	—	Clutch Position	
CS sensor	Control Sleeve Sensor	CSP sensor	Control Sleeve Position Sensor	#6
CKP sensor	Crankshaft Position Sensor	—	Crank Angle Sensor 2	
DLC	Data Link Connector	—	Diagnosis Connector	
DTM	Diagnostic Test Mode	—	Test Mode	#1
DTC	Diagnostic Trouble Code(s)	—	Service Code(s)	
DI	Distributor Ignition	—	Spark Ignition	
DLI	Distributorless Ignition	—	Direct Ignition	
EI	Electronic Ignition	—	Electronic Spark Ignition	#2
ECT	Engine Coolant Temperature	—	Water Thermo	
EM	Engine Modification	—	Engine Modification	
—	Engine Speed Input Signal	—	Engine RPM Signal	
EVAP	Evaporative Emission	—	Evaporative Emission	
EGR	Exhaust Gas Recirculation	—	Exhaust Gas Recirculation	
FC	Fan Control	—	Fan Control	
FF	Flexible Fuel	—	Flexible Fuel	
4GR	Fourth Gear	—	Overdrive	
—	Fuel Pump Relay	—	Circuit Opening Relay	#3
FSO solenoid	Fuel Shut Off Solenoid	FCV	Fuel Cut Valve	#6
GEN	Generator	—	Alternator	
GND	Ground	—	Ground/Earth	
HO2S	Heated Oxygen Sensor	—	Oxygen Sensor	With heater
IAC	Idle Air control	—	Idle Speed Control	
—	IDM Relay	—	Spill Valve Relay	#6
—	Incorrect Gear Ratio	—	—	
—	Injection Pump	FIP	Fuel Injection Pump	#6
—	Input/Turbine Speed Sensor	—	Pulse Generator	
IAT	Intake Air Temperature	—	Intake Air Thermo	
KS	Knock Sensor	—	Knock Sensor	
MIL	Malfunction Indicator Lamp	—	Malfunction Indicator Light	
MAP	Manifold Absolute Pressure	—	Intake Air Pressure	
MAF sensor	Mass Air Flow Sensor	—	Airflow Sensor	
MFL	Multiport Fuel Injection	—	Multiport Fuel Injection	
OBD	On-Board Diagnostic	—	Diagnosis/SelfDiagnosis	
OL	Open Loop	—	Open Loop	
—	Output Speed Sensor	—	Vehicle Speed Sensor 1	
OC	Oxidation Catalytic Converter	—	Catalytic Converter	

Sport AT

Position/Range	Mode	Gear position		Shift pattern			Transaxle							Operation of shift solenoid				
										2–4 brake band				Solenoid valve (duty-cycle type)			Solenoid valve (ON / OFF type)	
				Shift	TCC	Engine brake	Forward clutch	3–4 clutch	Reverse clutch	Applied	Released	Low and reverse brake	One-way clutch	Shift solenoid A	Shift solenoid B	Shift solenoid C	Shift solenoid D	Shift solenoid E
P	–	Neutral	–	–										–	–	–	ON	OFF
R	–	Reverse	2.648	–		×			×			×		OPEN	OPEN	OPEN	OFF	OFF
N	–	Neutral	–	–										–	–	–	ON	OFF
D	*1 POWER/ NORMAL	1GR	2.816	↕			×						⊗	OPEN	CLOSE	CLOSE	OFF	OFF
		2GR	1.497	↕		×	×			×				OPEN	OPEN	CLOSE	OFF	OFF
		3GR	1.000	↕		×	×	×		× *3	×			OPEN	OPEN	OPEN	OFF	OFF
		4GR	0.725	↕		×		×		×				CLOSE	OPEN	OPEN	ON	OFF
		4GR *2 TCC ON	0.725	↕	×	×		×		×				CLOSE	OPEN	OPEN	ON	ON
M	MANUAL	1GR	2.816	↕ ↕ ⇡		×	×					×	⊗	OPEN	OPEN	CLOSE	ON	ON
		2GR	1.497	↕ ↕ ⇡		×	×			×				OPEN	OPEN	CLOSE	OFF	OFF
		3GR	1.000	↕ ↕ ⇡		×	×	×		× *3	×			OPEN	OPEN	OPEN	OFF	OFF
		4GR	0.725	↕ ↕ ⇡		×		×		×				CLOSE	OPEN	OPEN	ON	OFF
		4GR TCC ON	0.725	↕ ↕ ⇡	×	×		×		×				CLOSE	OPEN	OPEN	ON	ON

↕ : Automatic shift according to set speed and throttle opening angle
↕ : Manual shift based on selector lever operation
⇡ : Consecutive shift by tapping selector lever two times in the downshift ( )direction
*1 : Automatically switches between POWER and NORMAL modes according to accelerator pedal depressing speed
*2 : Performs TCC operation in NORMAL mode
*3 : Indicates operation although the band servo remains deactivated due to the large area of the release pressure side.
× : Operating
⊗ : Transmits the torque only when driving

OPEN: Engages the line pressure to the clutch pressure (Solenoid de-energized)
CLOSE: Drains the clutch pressure (Solenoid energized)
ON: Engages the output port and the supply port (Solenoid reducing pressure)
OFF: Engages the output port and the drain port (Drains the output port)

B6U0517S028

1GR (D range)

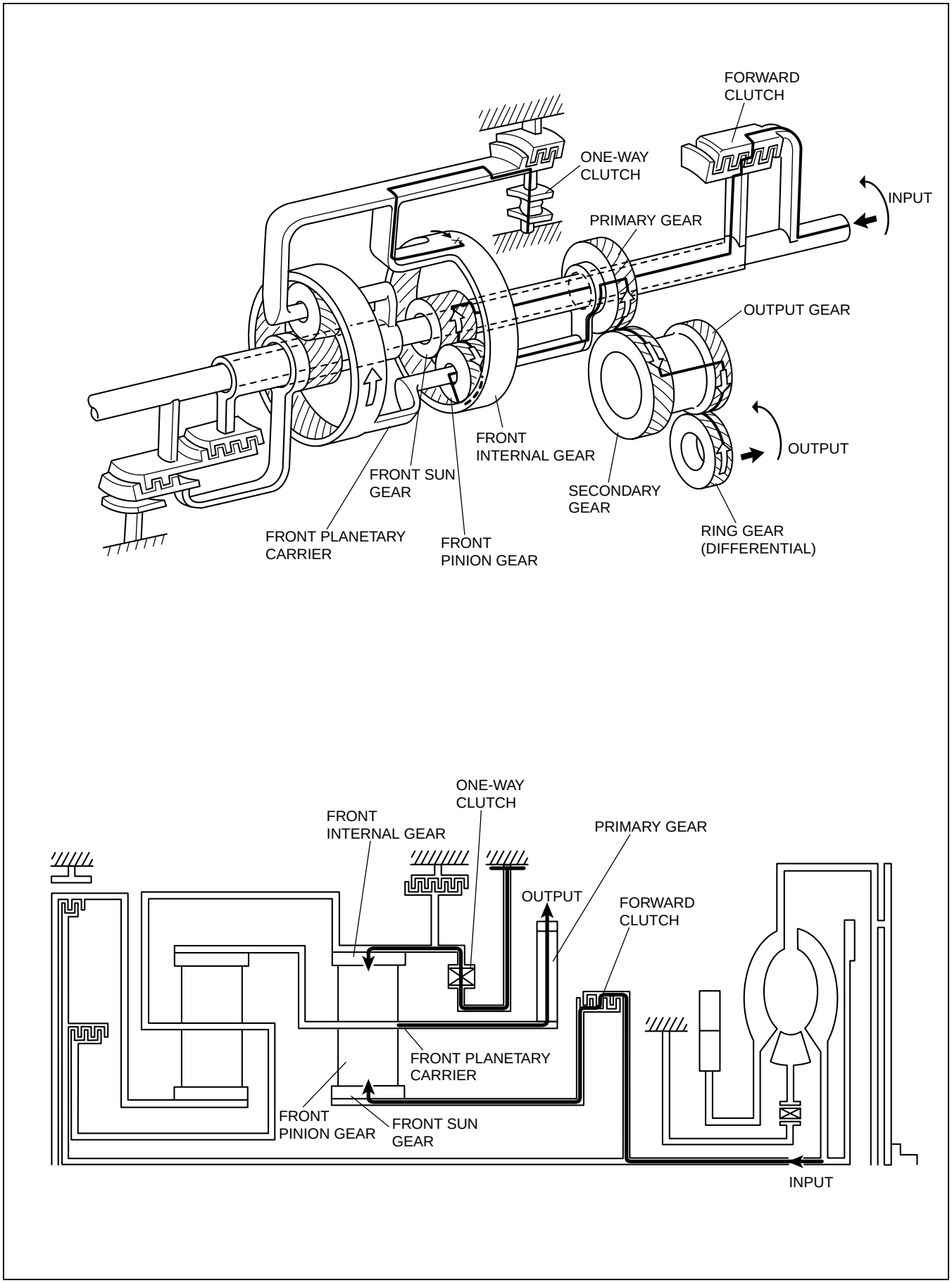

C3U0517T005

PLANETARY GEAR OUTLINE

C3U051701030A20

- The planetary gear is a transaxle which converts the driving force of the turbine shaft to the optimal driving force and transmits it to the output gear through the operation of each clutch and brake.
- A double arranged gear with a single planetary gear unit is adopted for the planetary gear; they are the front planetary gear and the rear planetary gear (from converter side).
- The planetary gear consists of the internal gear, planetary carrier (pinion gears), and the sun gear.

PLANETARY GEAR STRUCTURE

C3U051701030A21

- The front planetary gear is integrated with the one-way clutch outer race and engaged with the drive plate of the low and reverse brake.
  Because of this, when the front planetary gear rotates, the one-way clutch outer race and the drive plate of the low and reverse brake also rotate together.
- The front sun gear is installed inside of the front pinion gears, and the front internal gear is installed outside of the front pinion gears. The front sun gear is engaged with the forward clutch hub, and the front internal gear is engaged with the rear planetary carrier.
- The rear planetary gear and the rear pinion gear have the rear sun gear installed inside and the rear internal gear outside. The rear sun gear is engaged with the turbine shaft via the 2-4 brake drum, and the rear internal gear is engaged with the primary gear via the front planetary carrier.

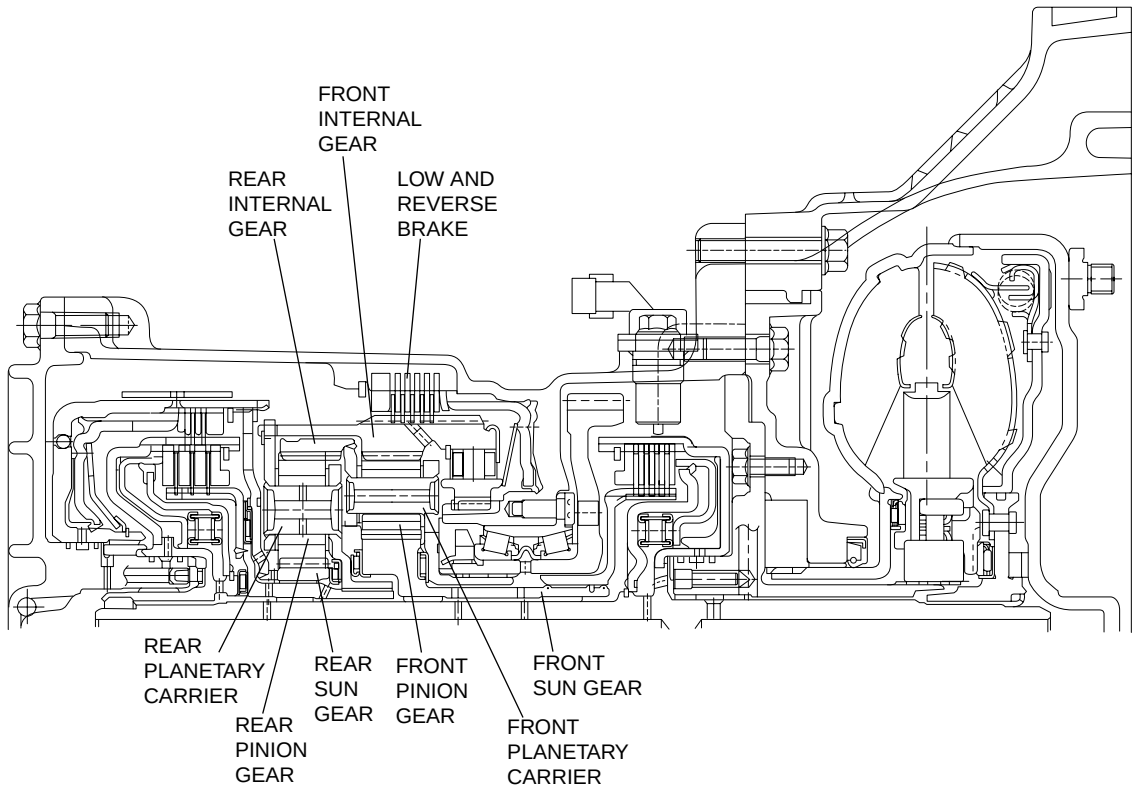

C3U0517A005

OIL PUMP OUTLINE

C3U051719220A02

- The light-weight, compact, and quiet trochoid gear type oil pump is adopted to reduce the pump driving torque.
- The direct drive type oil pump is adopted and placed behind the torque converter.

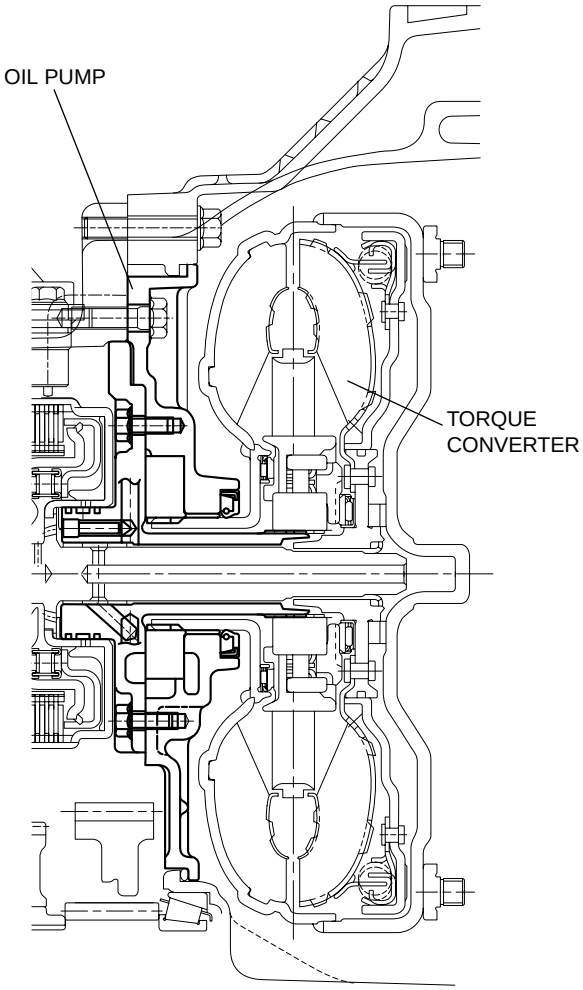

C3U0517T015

AUTOMATIC TRANSAXLE CLEANING

C3U051700000A01

Cleaning Notes

1. Clean the transaxle exterior thoroughly with steam, cleaning solvents, or both, before disassembly.

   Warning
   - **Using compressed air can cause dirt and other particles to fly out, causing injury to the eyes. Wear protective eye wear whenever using compressed air.**

2. Clean the removed parts with cleaning solvent, and dry with compressed air. Clean out all holes and passages with compressed air, and verify that there are no obstructions.

AUTOMATIC TRANSAXLE DISASSEMBLY

C3U051700000A02

Precaution

General notes

- The oil pan could contain small chips, shavings, and other particles which may be helpful in inspecting the condition of the transaxle and diagnosing certrain problems.
  To ensure that all foreign particles stay in the oil pan, make sure that the transaxle is never tipped completely over while the oil pan is still installed.
  1. Disassemble the transaxle in a clean area (dustproof work space) to prevent entry of dust into the mechanisms.
  2. Inspect the individual transaxle components in accordance with the QUICK DIAGNOSIS CHART during disassembly.
  3. Use only plastic hammers when applying force to separate the light alloy case joints.
  4. Never use rags during disassembly; they may leave particles that can clog fluid passage.
  5. Several parts resemble one another; arrange them so that they do not get mixed up.
  6. Disassemble the control valve component and thoroughly clean it when the clutch or brake band has burned or when the ATF has degenerated.

  Warning
  - **Although the stand has a self-locking brake system, there is a possibility that the brake may not hold when the transaxle is held in a lopsided position on the stand. This would cause the transaxle to turn suddenly, causing serious injury. Never keep the transaxle tilted to one side. Always hold the rotating handle firmly when turning the transaxle.**

19. Remove the control valve body.

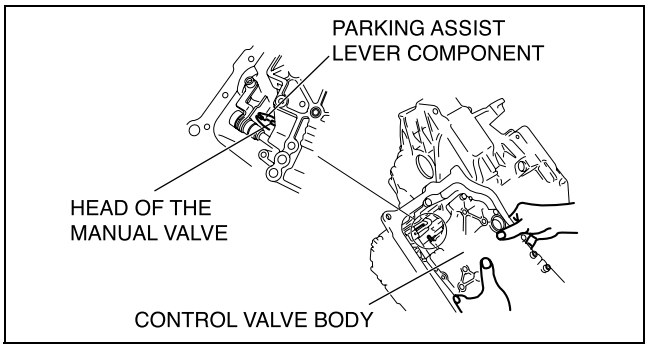

B3E0517A206

20. Remove the coupler component.

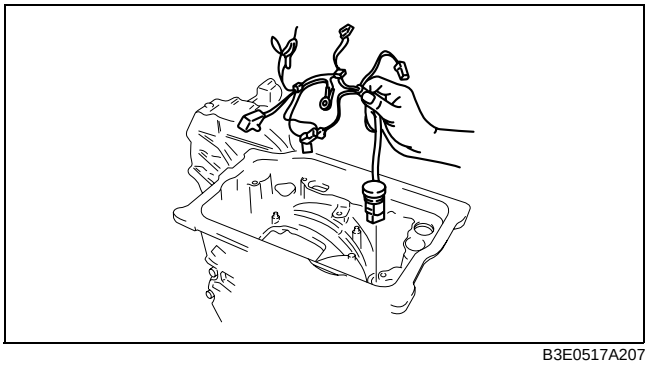

B3E0517A207

21. Remove the accumulator component.
22. Remove the manual shaft.

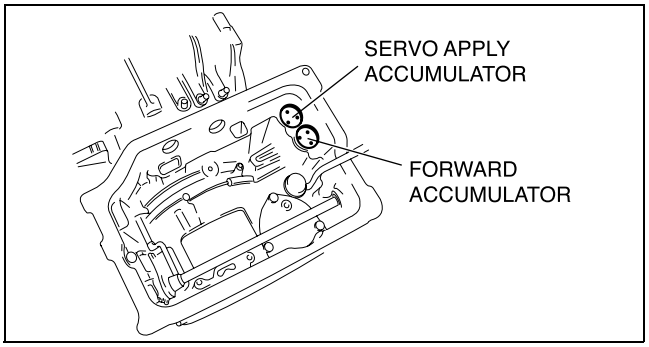

B3E0517A208

(1) Remove the roll pin using a pin punch.
(2) Remove the manual shaft.

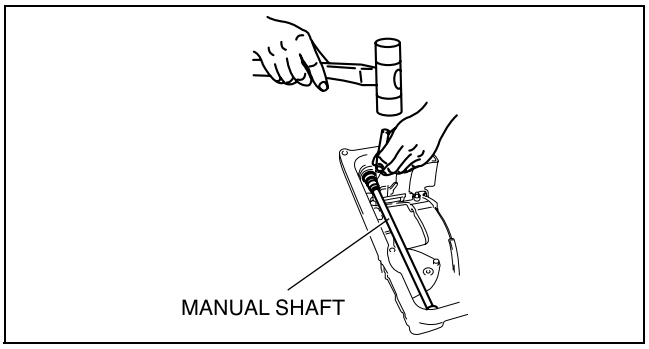

B3E0517A209

(3) Remove the O-ring from the manual shaft.

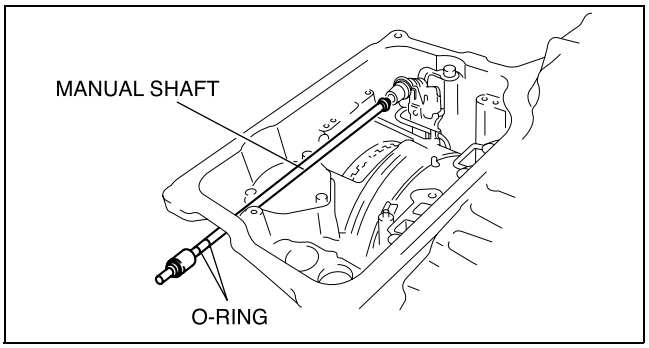

B3E0517A210

48. Remove the bearing and distance piece.

Caution
- **Removing the bearing race using a flathead screwdriver can damage the inside of the bearing race. Handle the flathead screwdriver carefully.**

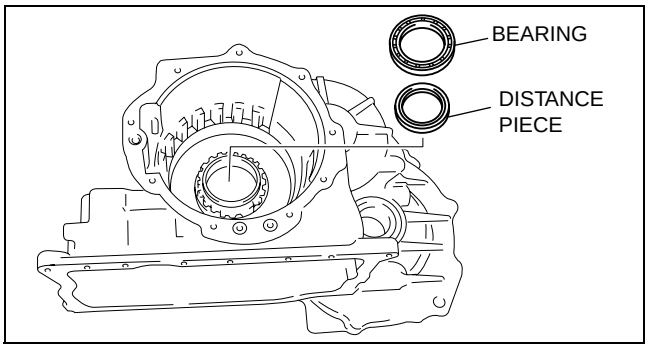

B3E0517A235

49. Remove torx screws from the converter housing side.
50. Remove the bearing race.

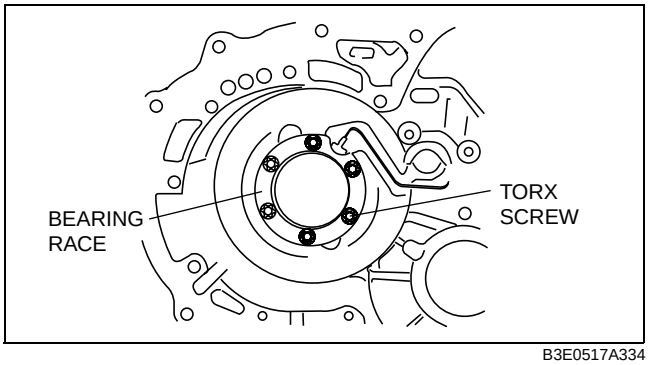

B3E0517A334

51. Remove the bearing race using the **SST** as shown in the figure.

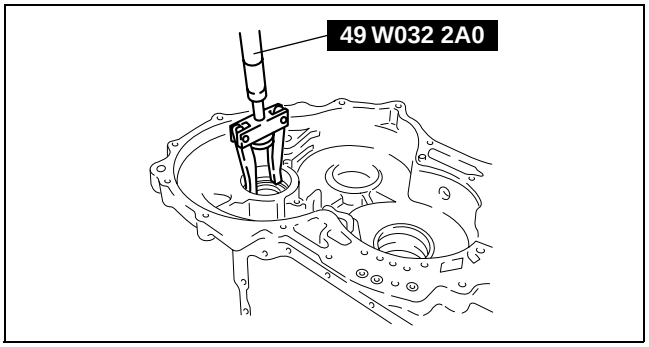

B3E0517A238

52. Tap the funnel at the areas indicated in the figure using a flathead screwdriver, etc. to make gaps big enough to install the **SST**. Then remove the bearing race.
53. Remove the funnel.

Caution
- **Removing the oil pipe using a flathead screwdriver can damage the oil pipe. Handle the flathead screwdriver carefully.**

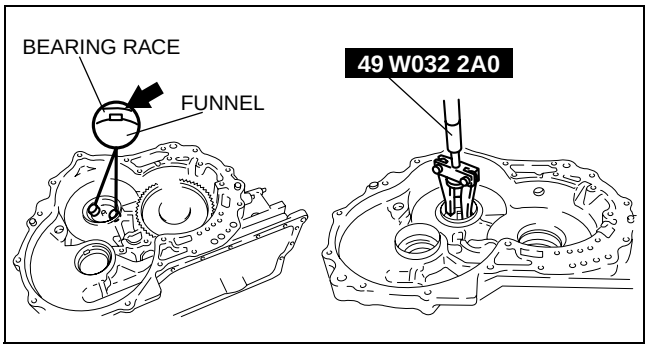

B3E0517A239

54. Remove the oil pipe.

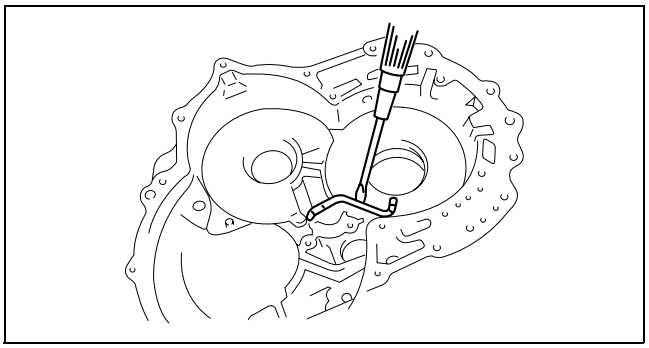
B3E0517A240

5. Apply ATF to the circumference of the forward clutch piston seal, and install the piston into the forward clutch drum and turbine shaft.
6. Install the spring and retainer component.

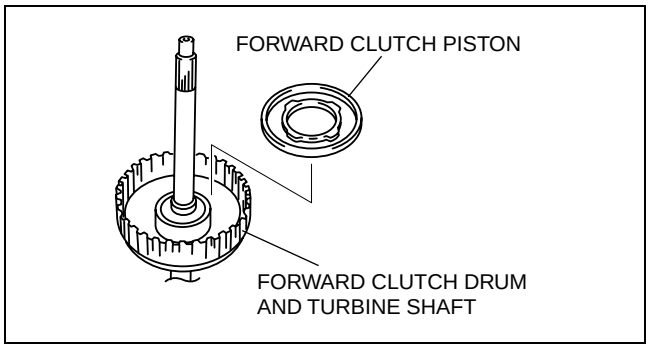

B3E0517A113

7. Apply ATF to the seal plate, and install it onto the forward clutch drum.

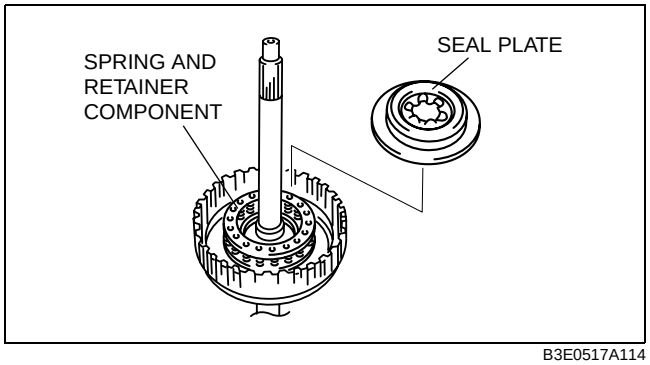

B3E0517A114

8. Install the **SST** to the forward clutch drum and turbine shaft as shown.

Caution

- **Depress the seal plate only enough to remove the snap ring. Overpressing will damage the seal plate assembly edges.**

9. Compress the seal plate.
10. Install the snap ring.
11. Remove the **SST**.
12. Install the drive and driven plates in the following order.
    Driven—Drive—Driven—Drive—Driven—Drive—Driven—Drive
13. Install the retaining plate.
14. Install the snap ring.
15. Measure the forward clutch clearance.
    (1) Install the forward clutch in the oil pump, and set the dial gauge.

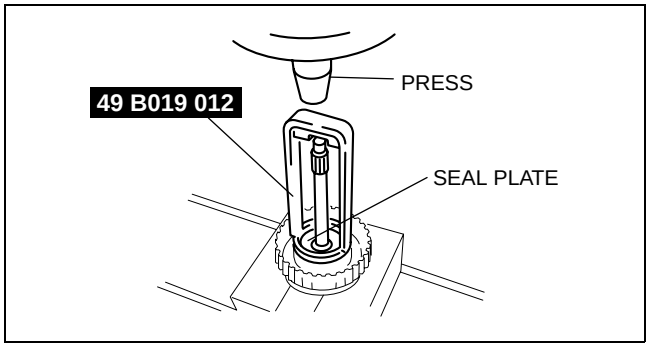

B3E0517A109

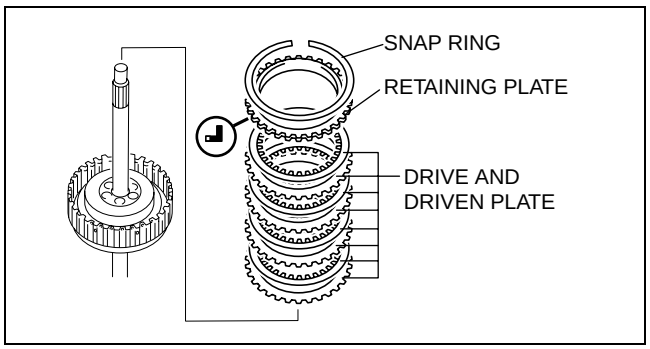

B3E0517A115

15. Apply petroleum jelly to the bearing, and secure it onto the 3–4 clutch component.

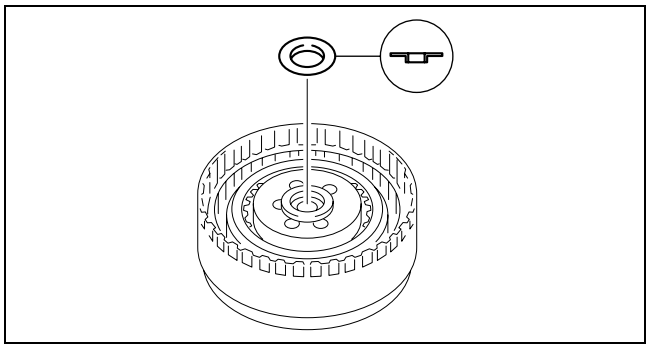

B3E0517A264

16. Install the 3–4 clutch hub.
17. Apply petroleum jelly to the bearing, and secure it onto the 3–4 clutch hub as shown in the figure.
18. Install the rear sun gear plate onto the 2–4 brake drum.
19. Install the snap ring.

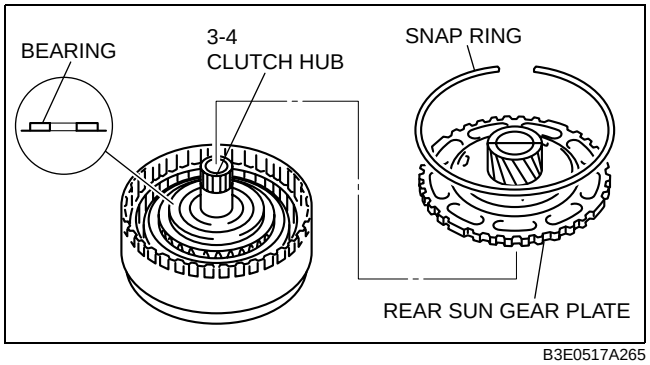

B3E0517A265

FRONT INTERNAL GEAR ONE-WAY CLUTCH COMPONENT DISASSEMBLY/ASSEMBLY

C3U051719500A03

1. Perform the preinspection before disassembly.
   (See 05–17Z–88 Front Internal Gear and One-Way Clutch Component Preinspection.)
2. Disassemble in the order indicated in the table.
3. Assemble in the reverse order of disassembly.

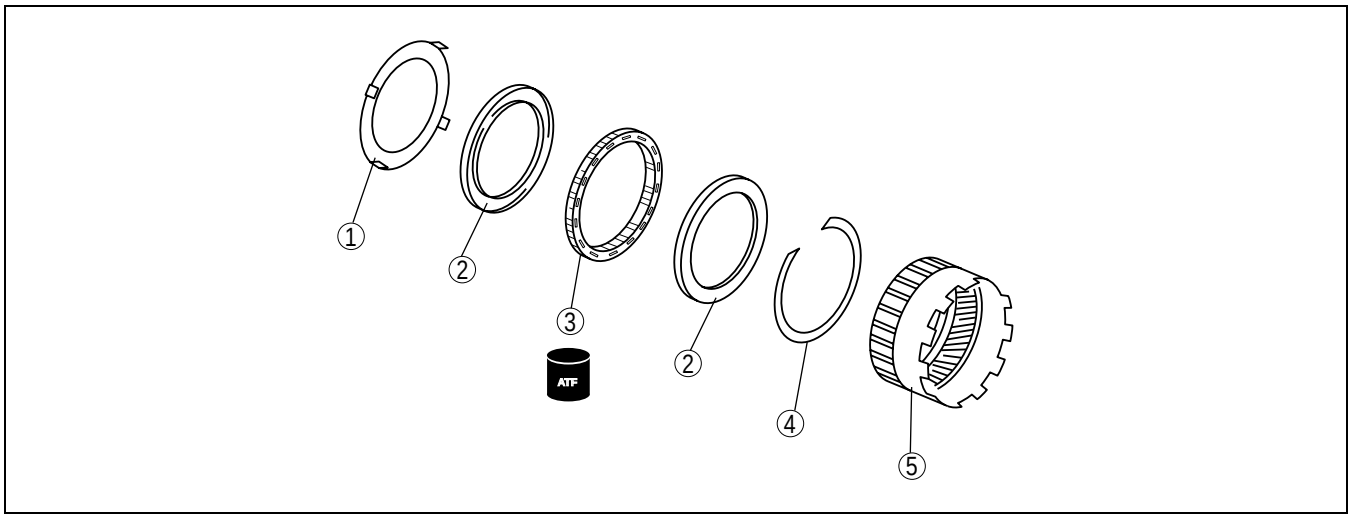

B3E0517A119

1	One-way clutch retainer (See 05–17Z–32 One-Way Clutch Retainer Disassembly Note.)
2	Side race
3	One-way clutch
4	Snap ring
5	Front internal gear

(3) Apply compressed air to the part indicated in the figure and let the low and reverse brake piston stroke three times.

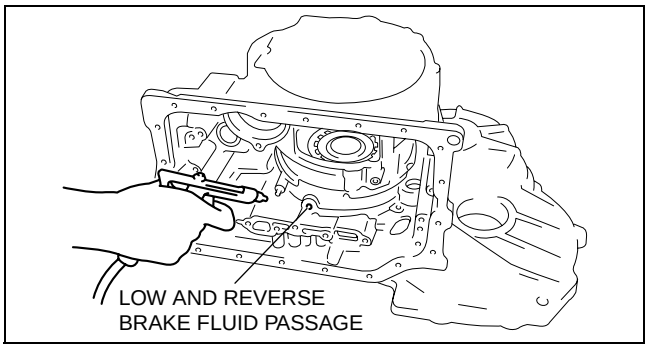

B3E0517A128

Air pressure
98.1 kPa {1.0 kgf/cm^2, 14 psi}

(4) Apply compressed air and operate the low and reverse brake piston. Read the value when the indicator of the dial gauge stops.
(5) Release the compressed air and read the dial gauge when the low and reverse brake piston is not operating.
(6) Calculate the low and reverse brake clearance according to the following formula:
Step (4) value—Step (5) value= low and reverse brake clearance.
(7) Measure the clearances at four locations (90° apart) by following the steps from (3) to (6). Verify that the average value is within the specification below:

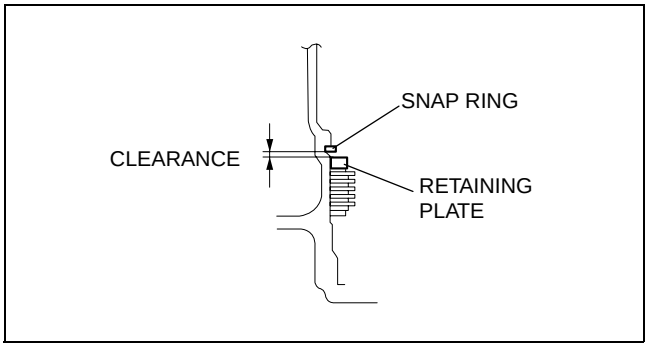

B3E0517A134

Low and reverse brake clearance
2.20—2.50 mm {0.087—0.098 in}

- If not within the specification, remove the snap ring and measure its thickness.

(8) Add the thickness to the average value calculated in step (7), and select the snap ring whose range includes the value.

Snap ring seizes

Range mm {in}	Snap ring sizes mm {in}
4.050—4.250 {0.159—0.167}	1.8 {0.071}
4.250—4.450 {0.167—0.175}	2.0 {0.079}
4.450—4.650 {0.175—0.183}	2.2 {0.087}
4.650—4.850 {0.183—0.190}	2.4 {0.094}
4.850—5.050 {0.190—0.199}	2.6 {0.102}
5.050—5.250 {0.199—0.207}	2.8 {0.110}
5.250—5.450 {0.207—0.215}	3.0 {0.118}

(9) Install the selected snap ring and perform steps (2) to (7) again. Verify that the calculated value satisfies the clearance specification.

12. Inspect the low and reverse brake operation by applying compressed air as shown.

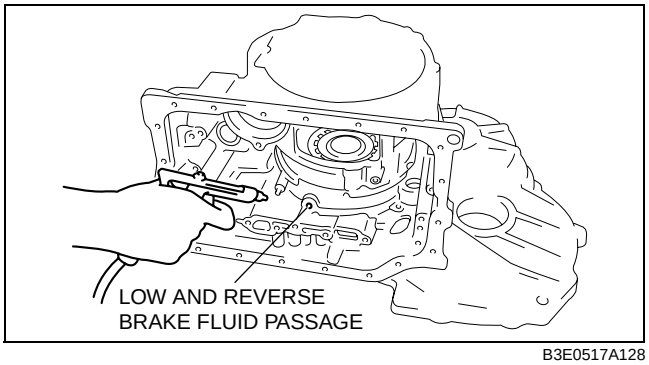

B3E0517A128

Air pressure
98.1 kPa {1.0 kgf/cm^2, 14 psi}

3. Assemble in the reverse order of disassembly.

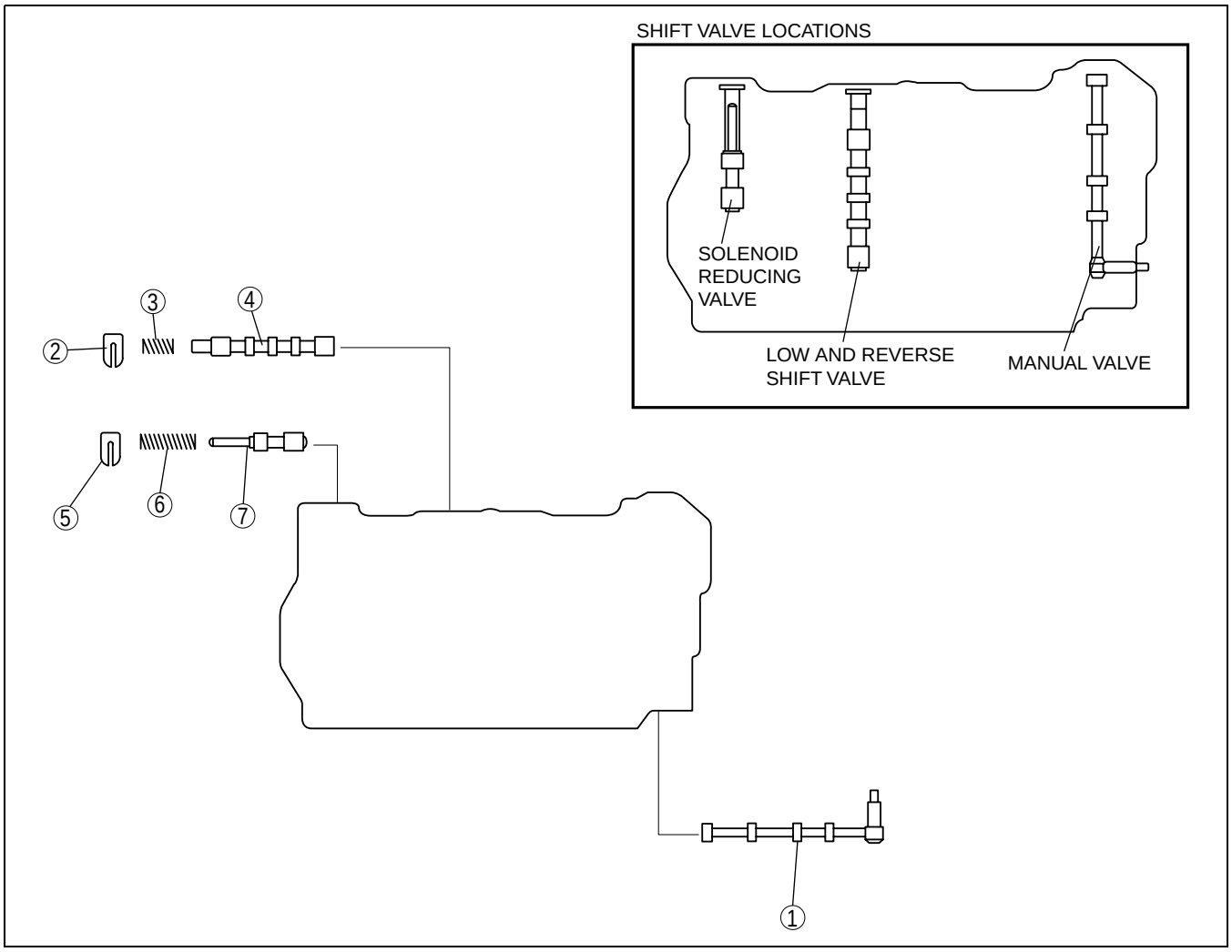

B3E0517A159

1	Manual valve
2	Retainer
3	Low and reverse shift valve spring
4	Low and reverse shift valve

5	Retainer
6	Solenoid reducing valve spring
7	Solenoid reducing valve

Assembly procedure

1. Measure the spring free length.

Item	Outer diameter mm {in}	Free length mm {in}	No. of coils	Wire diameter mm {in}
Low and reverse shift valve spring	8.7 {0.343}	31.3 {1.232}	9.0	0.8 {0.031}
Solenoid reducing valve spring	8.7 {0.343}	44.2 {1.740}	16.0	1.1 {0.043}

- If not as specified, replace the springs.

2. Install the solenoid reducing valve, solenoid reducing valve spring and retainer.

DIFFERENTIAL DISASSEMBLY/ASSEMBLY

C3U051727100A01

1. Perform the preinspeciton before disassembly. (See 05–17Z–90 Differential Preinspection.)
2. Disassemble in the order indicated in the table.
3. Assemble in the reverse order of disassembly.

RIVET FIXED TYPE

1	Side gear
2	Thrust washer
3	Roll pin (See 05–17Z–57 Roll Pin Disassembly Note.)
4	Pinion shaft
5	Pinion gear
6	Thrust washer
7	Bearings (See 05–17Z–57 Bearings Disassembly Note.)
8	Sensor rotor (See 05–17Z–57 Sensor Rotor Disassembly Note.)
9	Ring gear and gear case

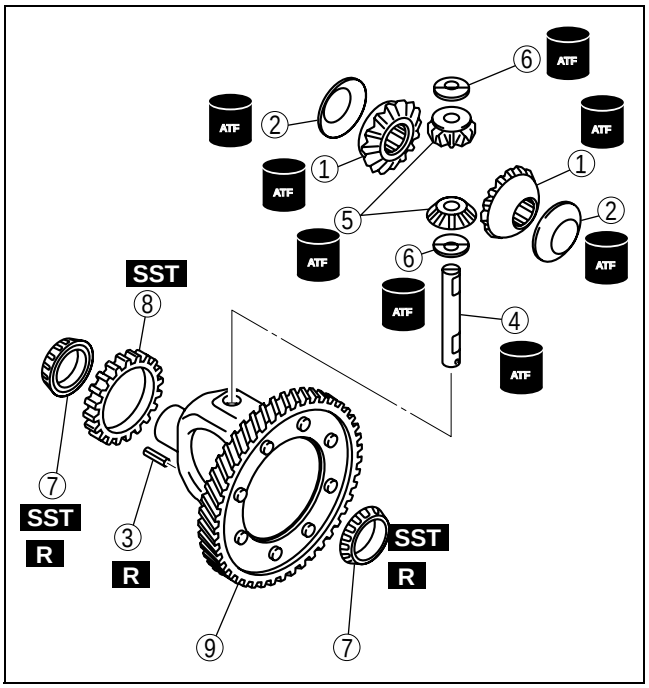

B3E0517A266

BOLT FIXED TYPE

1	Side gear
2	Thrust washer
3	Roll pin (See 05–17Z–57 Roll Pin Disassembly Note.)
4	Pinion shaft
5	Pinion gear
6	Thrust washer
7	Bearings (See 05–17Z–57 Bearings Disassembly Note.)
8	Sensor rotor (See 05–17Z–57 Sensor Rotor Disassembly Note.)
9	Ring gear
10	Gear case
11	Bolt

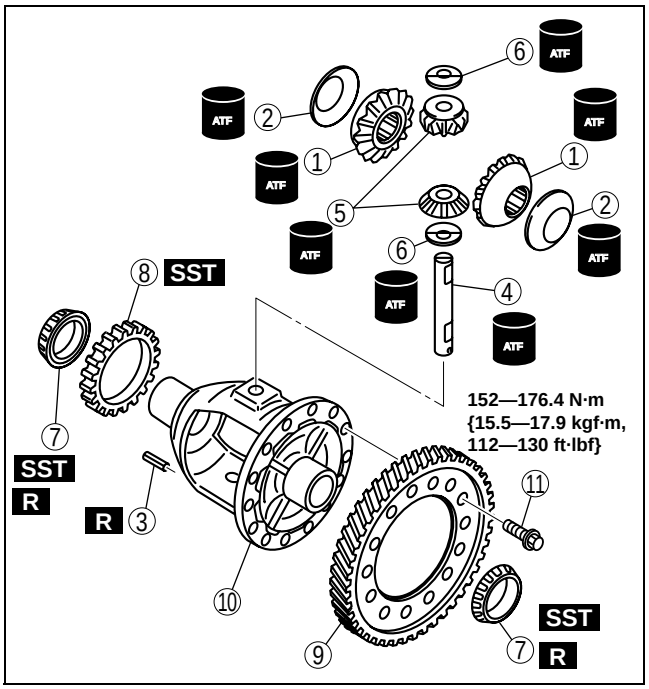

B3E0517A267

32. Install the pawl return spring to the parking pawl and parking pawl shaft.

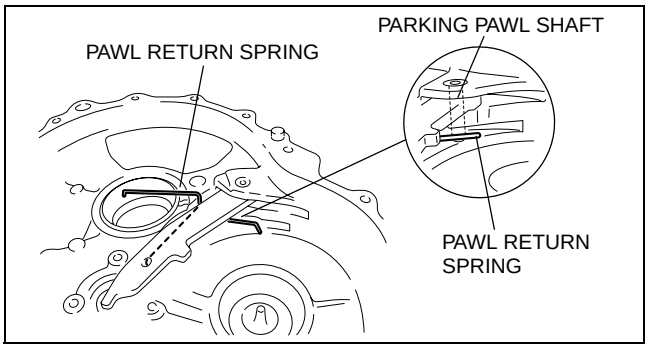

B3E0517A303

33. Install the support plate to the transaxle case.

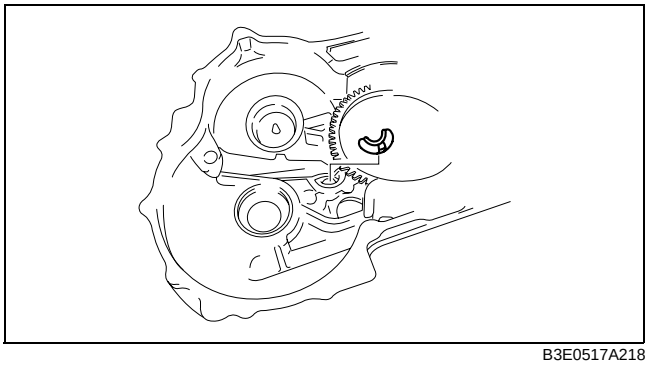

B3E0517A218

34. Install the actuator plate to the transaxle case.

Tightening torque
10.8—13.7 N·m
{110—140 kgf·cm, 95.5—121 in·lbf}

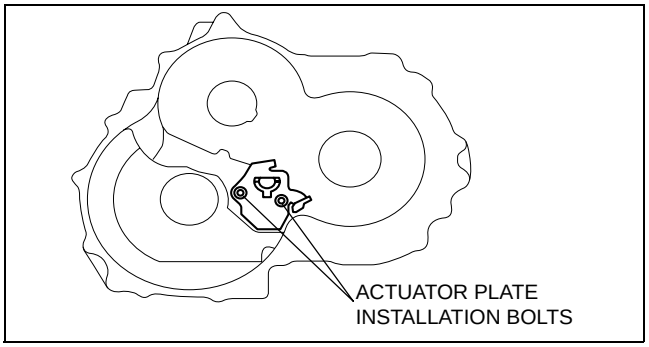

B3E0517A217

35. Install the secondary gear and output gear.

36. Install the differential.

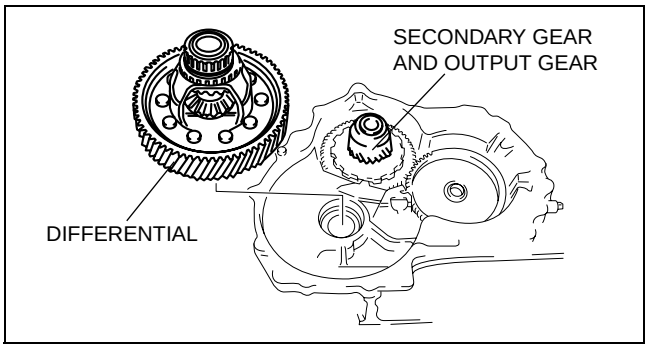

B3E0517A304

37. Install the forward clutch component.

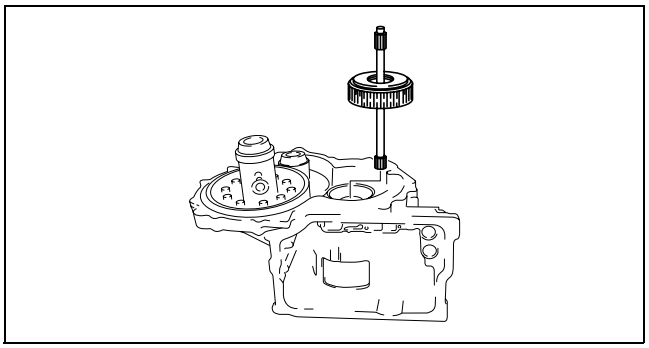

B3E0517A214