General

Camshaft, Wear Check

Surface irregularities may appear on VOLVO engine camshaft lobes in normal operation. This does not mean that the camshaft must be replaced. These marks do not adversely affect the engine's performance nor the durability of the engine or any of its components.

Fig. 2: Camshafts with acceptable wear, page 2 provides examples of camshaft lobes exhibiting this condition. These camshafts may be reused.

Fig. 3: Camshafts with unacceptable wear, page 2 provides examples of lobes exhibiting unacceptable wear and deterioration. These camshafts and the rocker arms corresponding to the worn lobes must be replaced.

Note: If there is any measurable wear, such as shown in Fig. 3: Camshafts with unacceptable wear, page 2, the camshaft should be replaced.

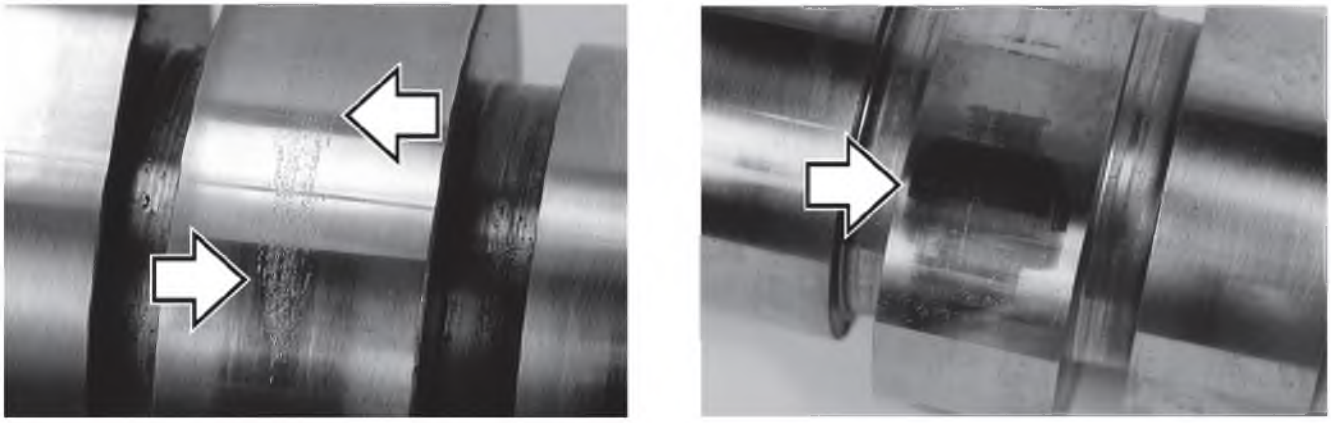

W2002219

Fig. 2: Camshafts with acceptable wear

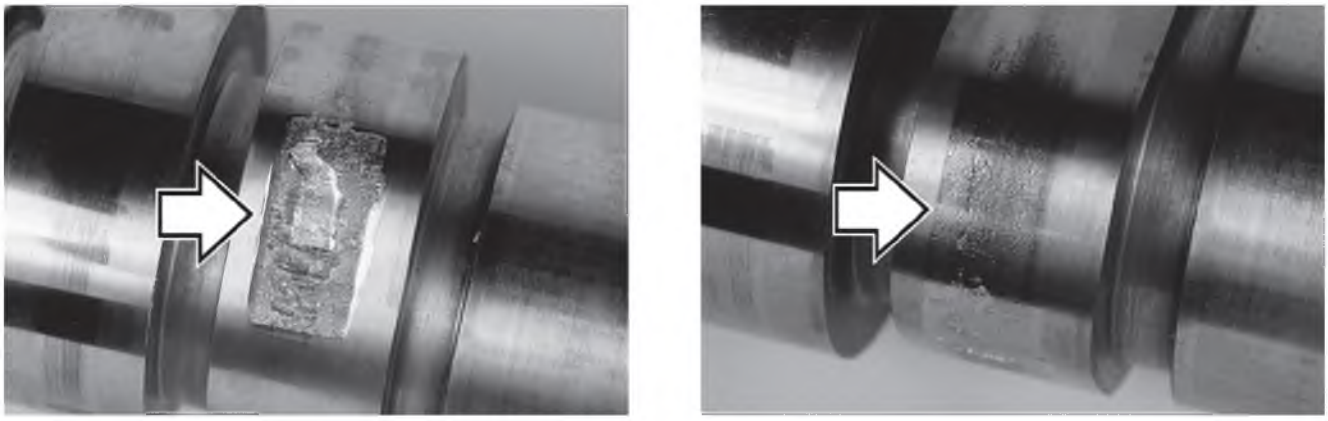

W2002221

Fig. 3: Camshafts with unacceptable wear

48

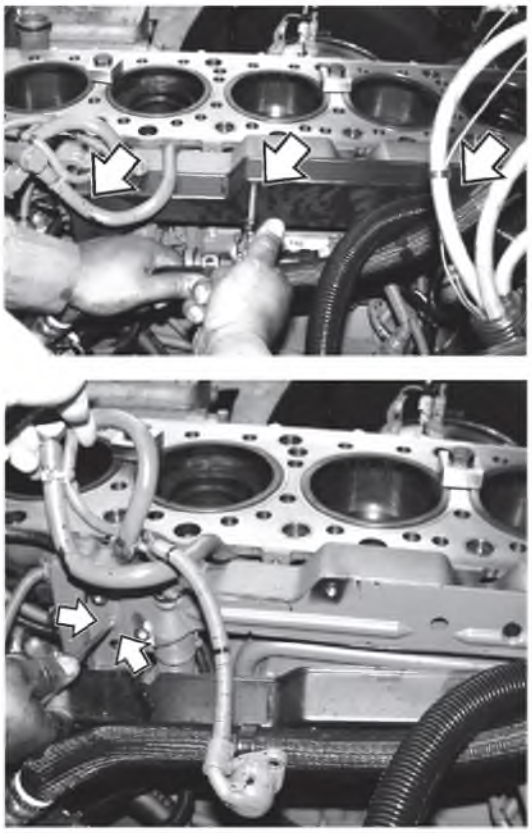

W2003987

Remove the cable harness box outer cover.

49
Remove the cable harness box intermediate cover.

50
Loosen mounting bolts and pull cable harness box away from cylinder block.

Note: The harness box may need to be secured against the frame rail to be kept out of the way.

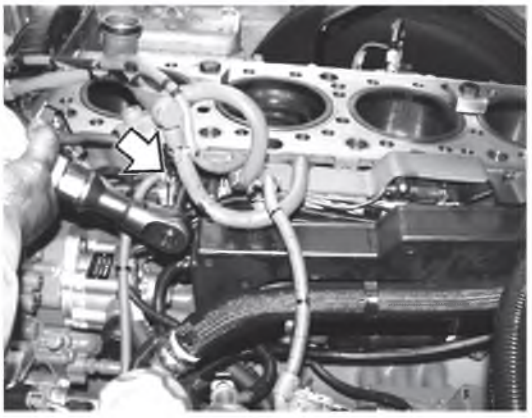

W2003988

51
Remove the intake manifold from the cylinder head (if not previously removed).

Design and Function

Cooling System

Charge Air Cooler

Charge Air Cooler Systems are essential today to meet emissions regulations. However, they also improve power density, lower fuel consumption, and reduce thermal stresses on the engine by cooling the turbocharged air before it enters the engine. The turbocharged air is heated up to 200° C (400° F) or even higher as it enters the charge cooler, and is cooled to around 40° C (100° F) when it leaves for the engine.

Accumulation of bugs and dirt in the finned areas of a Charge Air Cooler are known problems. If there is a build up of any debris like road film, bugs, etc. in just a section of a charge air cooler, that section overheats and torsional (twisting) stresses develop in the charge air cooler core. The fin passage cleanliness may not be as critical in an over-the-highway vehicle, but in construction, logging and mining equipment, it can be.

Before performing the actual leak test, make sure the pressure regulator is functioning properly; see “Cooling System, Flow” page 12.

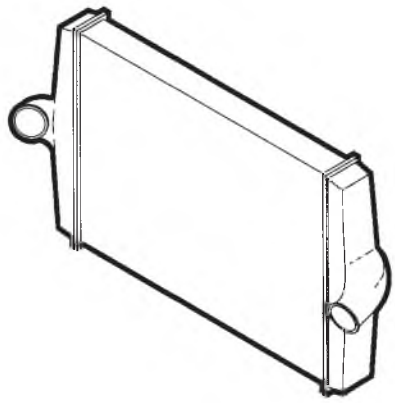

Fig. 1: Charge air cooler

Cooling System, Flow

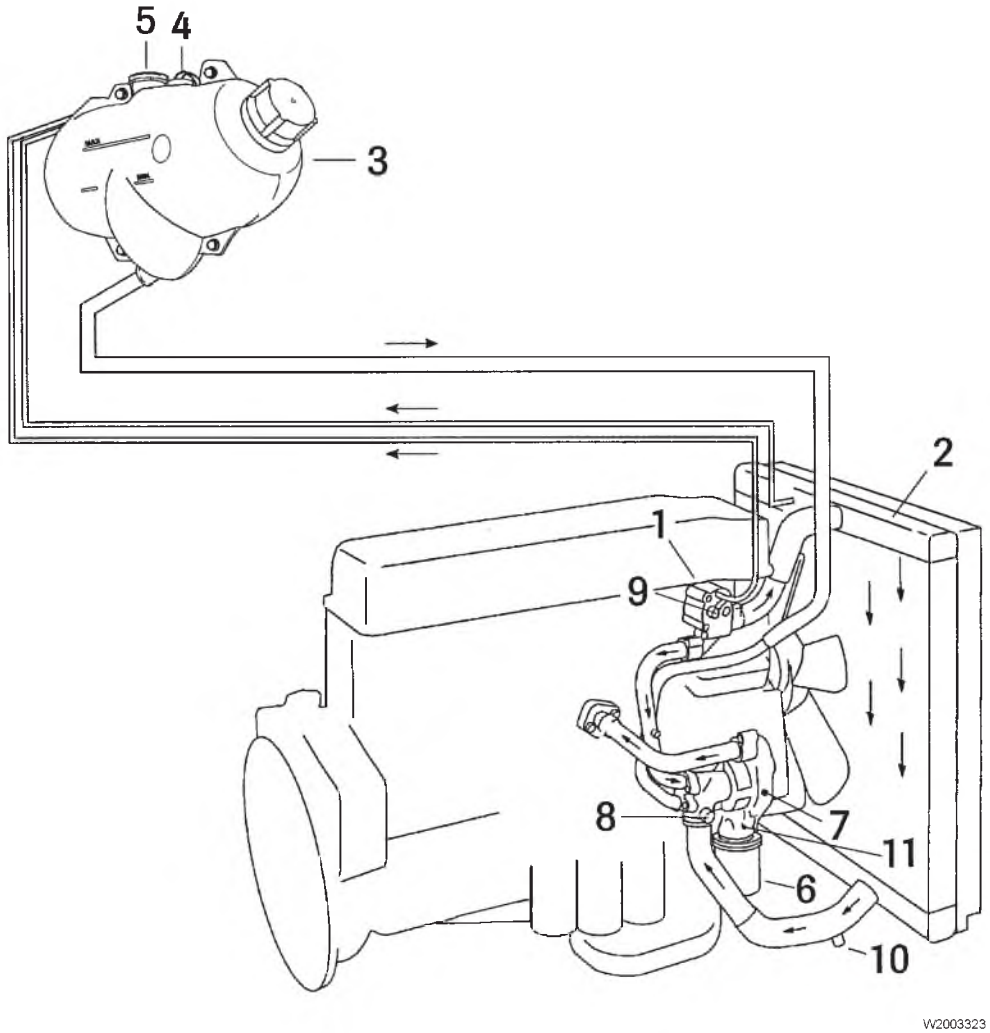

Fig. 2: Cooling system

1 Thermostat housing
2 Radiator
3 Expansion tank
4 Level sensor
5 Pressure cap
6 Coolant filter
7 Coolant pump
8 Heater return
9 Heater supply
10 Radiator drain valve
11 Shut-off valve—coolant pump

Service Procedures

2611-03-02-01
Radiator, Replacement

DANGER

Before working on a vehicle, set the parking brakes, place the transmission in neutral, and block the wheels. Failure to do so can result in unexpected vehicle movement and can cause serious personal injury or death.

WARNING

HOT ENGINE! Keep yourself and your test equipment clear of all moving parts or hot engine parts and/or fluids. A hot engine and/or fluids can cause burns or can permanently damage test equipment.

WARNING

Never remove the cap on the expansion tank while the engine is still hot. Wait until the coolant temperature is below 50° C (120° F). Scalding steam and fluid under pressure may escape and cause serious personal injuries.

WARNING

Do not work near the fan with the engine running. The engine fan can engage at any time without warning. Anyone near the fan when it turns on could be seriously injured. Before turning on the ignition, be sure that no one is near the fan.

WARNING

Always wear appropriate eye protection to prevent the risk of eye injury due to contact with engine debris or fluids.

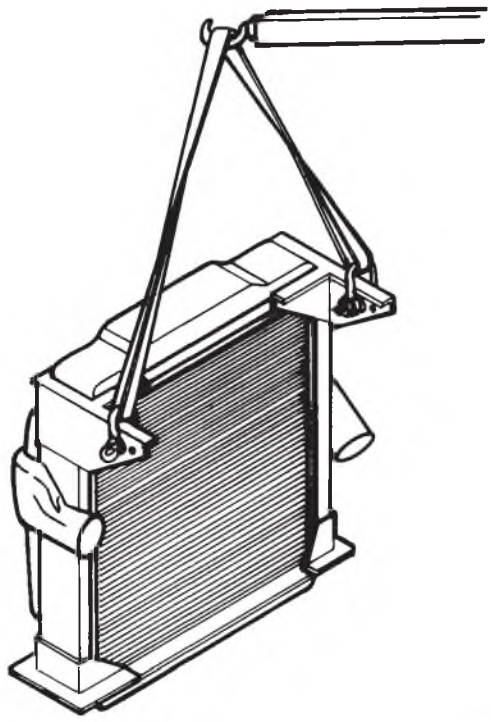

Fig. 22: Lifting radiator and charge air cooler assembly

Note: WG, AC

The radiator and charge air cooler are removed and installed as an assembly. Use of a lifting strap during removal and installation will help to prevent damage to the radiator/charge air cooler assembly.

11
Remove the coolant filter hoses.

12

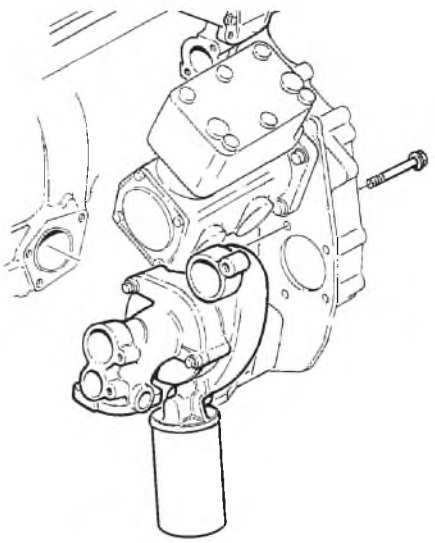

W2003332
Fig. 67: Removing coolant pump

Remove the bolts and lift off the coolant pump.

13
Remove the adapter for the remote coolant filter from the bottom of the coolant pump.

Installation

1
Clean all sealing surfaces.

2

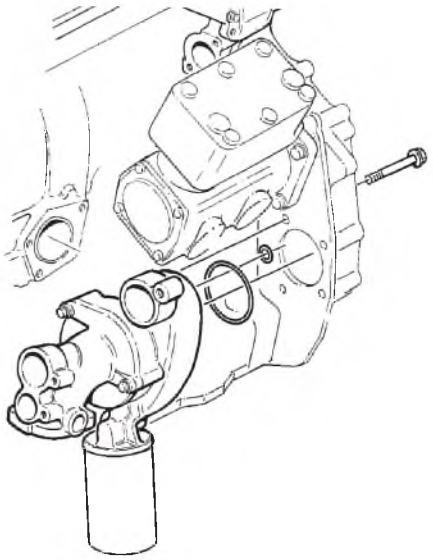

W2003331
Fig. 68: Installing coolant pump

Install the new coolant pump using new seals. Tighten the bolts to 48 ± 8 Nm (35 ± 6 ft-lb).

48 ± 8 Nm (35 ± 6 ft-lb)

3

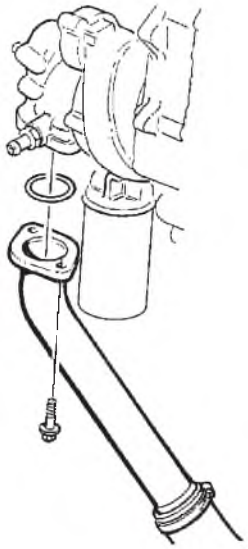

W2003330
Fig. 69: Pipe from radiator to coolant pump

Install the pipe from the radiator to the coolant pump using a new sealing ring.

4

Place the drive gear (4), hollow drift 9996626 and hydraulic cylinder 9992671 on the spindle and install the nut; see Fig. 83: Exploded view of coolant pump, page 51.

9996266
9992671

5

Using hydraulic pump 9996222, carefully press the drive gear down until it bottoms out against the bearing.

9996222

6

Remove the tools

7

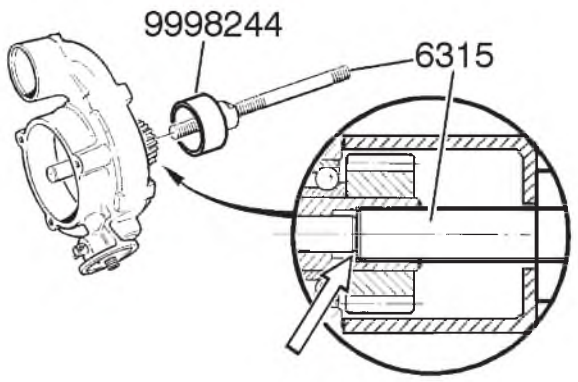

T2012619

Fig. 87: Using tool 9996315

Insert the spindle 9996315 through the hole of sleeve 9998244 and screw the long threaded end of the spindle into the shaft until it bottoms out against the shaft. Tighten the nut by hand.

9996315
9998244

Note: Make sure that the spindle 9996315 is threaded in until it bottoms out against the shaft before tightening the nut.

8

Install the pump in a press so that the spindle's nut rests flat against the surface of the press.

9

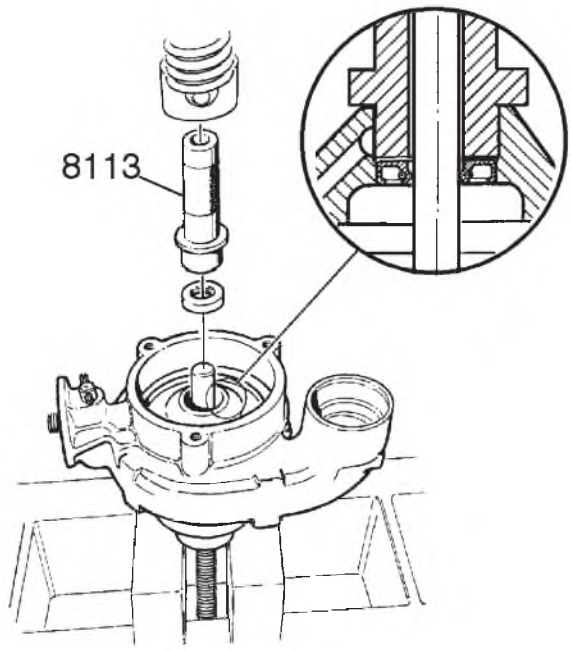

T2012620

Fig. 88: Installing the oil seal

Install the oil seal (6) with the sealing lip against the drive gear; see Fig. 83: Exploded view of coolant pump, page 51.

10

Using drift 9998113, carefully press the seal into position until it is level with the edge of the pump housing.

9998113

Note: Do not press in the drift until it hits the pump housing.

11

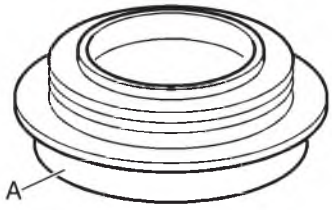

T2012621

Fig. 89: Coolant seal, applying Loc-Tite™.

Apply Loc-Tite™ locking fluid to the coolant seal's contact surface (A) against the housing.

20

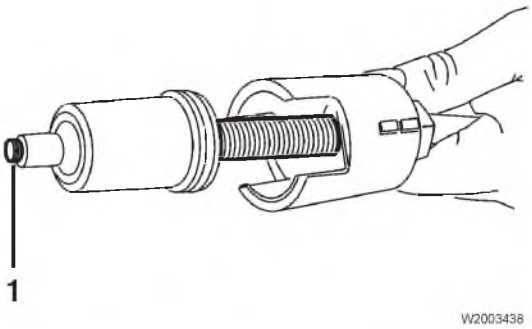

⚠ CAUTION

Pieces of the copper sleeve that fall into the cylinder can seriously damage the piston and/or turbocharger.

When the sleeve is removed, the extractor tool should be extended beyond the cooper sleeve at least 3 mm (0.125 in); see (1). If it is not, check to make sure that a piece of the cooper sleeve has not broken off and fallen into the cylinder.

Cleaning the Copper Sleeve Bore

21

Fig. 59: Cleaning kit J-42885

When replacing the injector copper sleeves in the cylinder head, it is important that the sleeve bore in the head is free from any carbon deposits and any other residue (i.e. pieces of the O-ring, etc.) before installing the new sleeve. Use the cleaning kit J-42885 in the following steps. J-42885

22

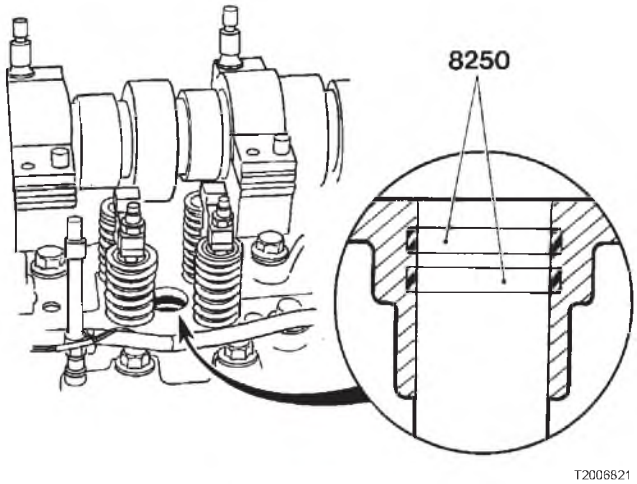

Install the 2 sealing clamps 9998250 in the cylinder head fuel gallery. 9998250

23

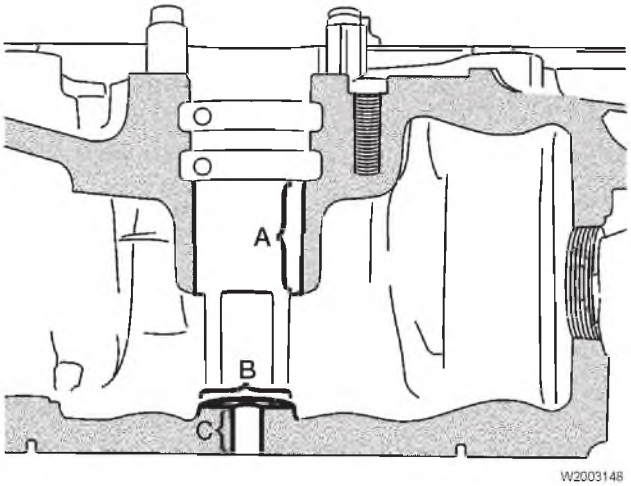

⚠ WARNING

Wear safety glasses while using cleaning brushes or compressed air. Failure to do so could cause eye injury from flying debris.

Use the "7/16 in. diameter" brush inside bore (C). Move the brush up and down while turning it at the same time.

J-42885

Design and Function

Lubricating and Oil System

General

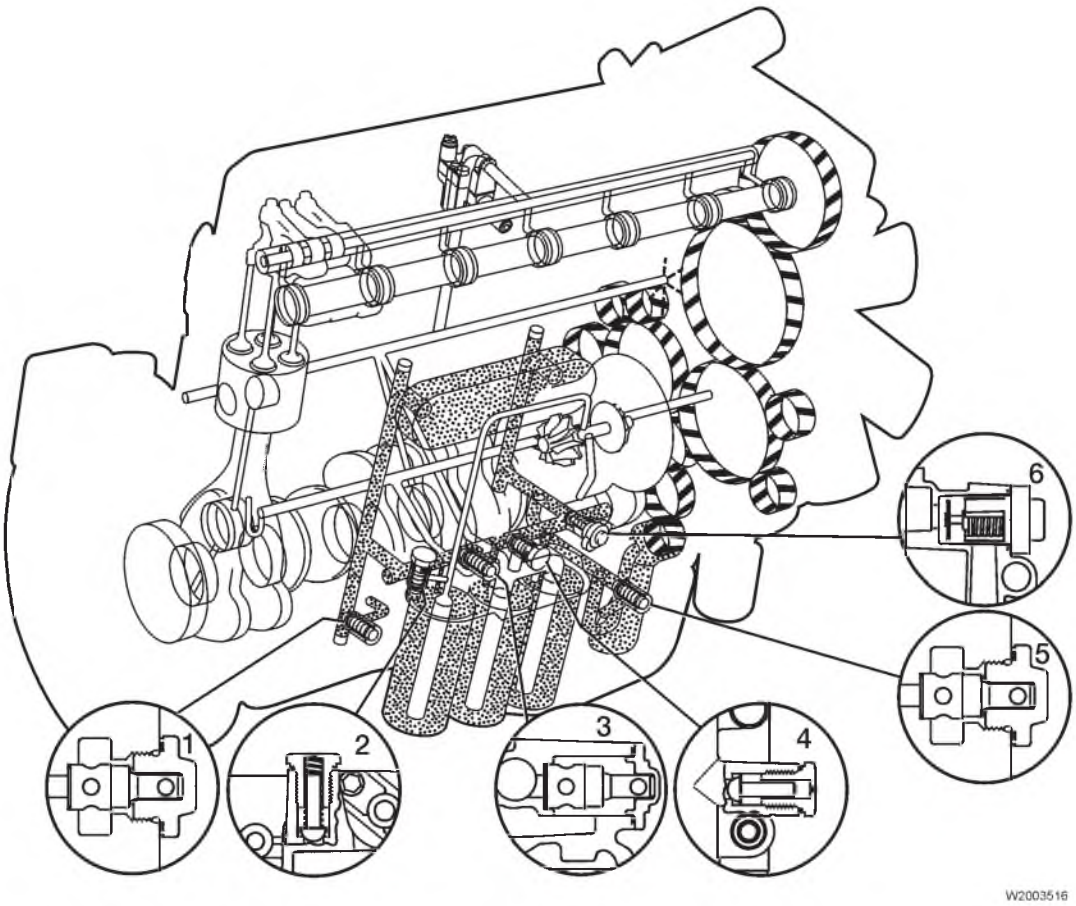

1 Reducing valve
2 Overflow valve
3 Cooling valve
4 Overflow valve
5 Safety valve
6 Thermostatic valve

The engine has a forced lubrication provided by a gear pump driven by the crankshaft through an intermediate gear. The lubrication system contains two full flow filters and a by-pass filter. The oil flow is adjusted by six valves. Three of these are individual valves and they are identified with color codes to avoid an incorrect installation. This color code may be replaced by a number that represents the valve opening pressure.

A flat oil cooler is assembled under a cast aluminum cover in the engine block right side.

The lubrication oil pump impels the oil towards the two full flow filters and the by-pass filter.
The by-pass filter contains a low oil passageway and a high degree of filtering.

After passing through the full flow filters, the oil moves to the cylinder block, where it is distributed through galleries to engine points in need of lubrication.

The purpose of the lubrication system is to lubricate the engines movable parts in order to keep friction and wearing to a minimum. The oil transports coal and other residues stuck on the cylinder walls after combustion. The oil also functions as a sealer, for the cylinder liners have been projected in such a way that a thin layer of oil is always kept in its walls. This make it easier for the piston rings to seal the combustion chamber. The oil also cool the engine inner and, at the same time, reduces the sounds produced by the engine.

Tools

Special Tools

The following special tools are required for work with the D12 electronic control system. The 3917916 VOLVO breakout kit, along with its components, is available from Volvo Truck. When requesting tools, provide the appropriate part number. Part numbers beginning with "J" are available from Kent-Moore.

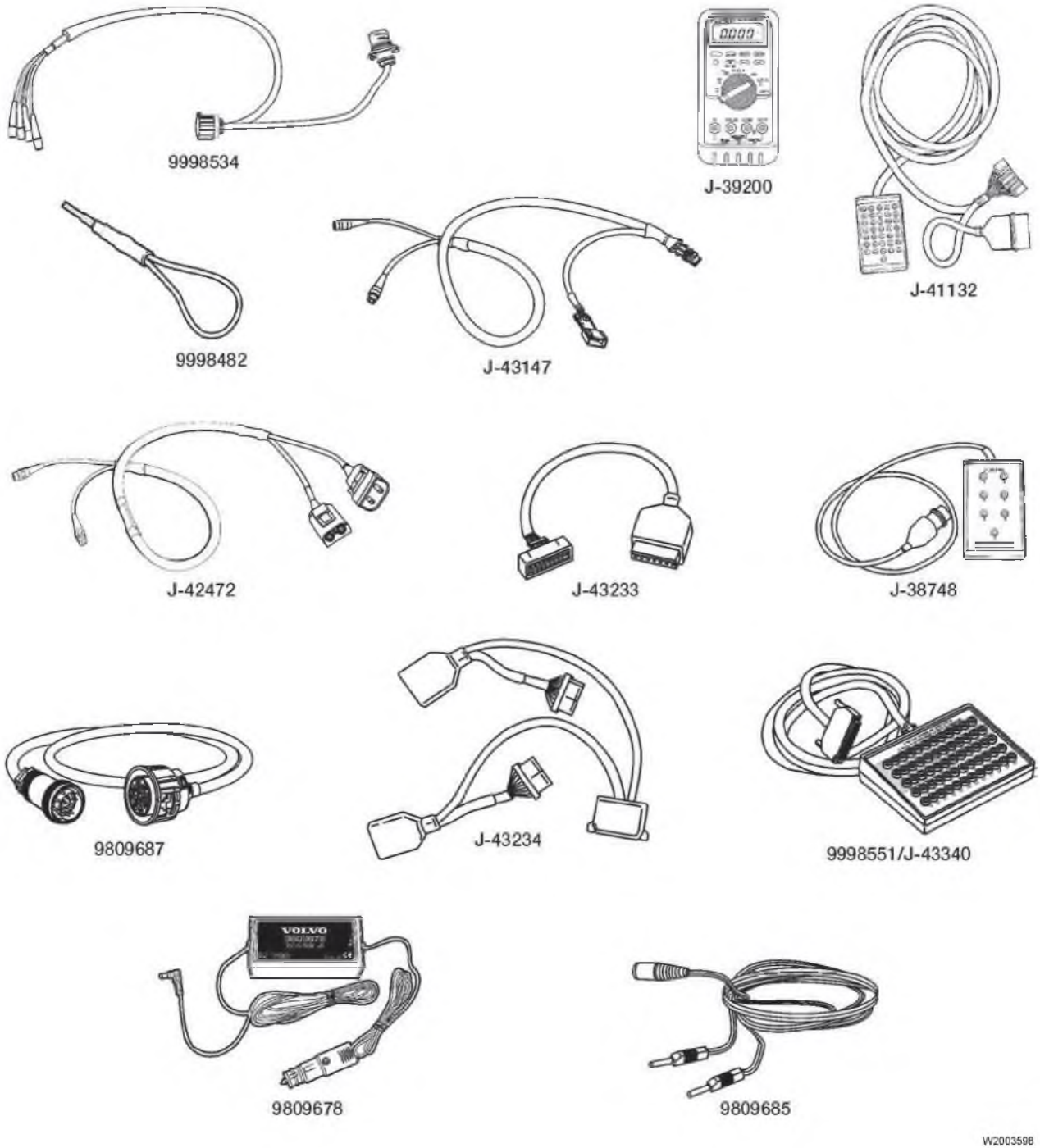

See list on next page for information about the tools in the picture.

MID 128 EECU

MID 128 Fault Code Table

MID: Message Identification Description.

SID: Subsystem Identification Description.

PID: Parameter Identification Description.

FMI: Failure Mode Identifier.

Error code	Component/Function	FMI	Section
MID 128-PID 45	Preheater Status	3, 4, 5	“MID 128 PID 45 Preheater Status” page 96
MID 128-PID 49	ABS Control Status	9	“MID 128 PID 49 ABS Control Status” page 98
MID 128-PID 84	Road speed	9, 11	“MID 128 PID 84 Road Speed” page 100
MID 128-PID 85	Cruise Control Status	9	“MID 128 PID 85 Cruise Control Status” page 102
MID 128-PID 91	Accelerator Pedal Position	9, 11	“MID 128 PID 91 Accelerator Pedal Position” page 104
MID 128-PID 94	Fuel Delivery Pressure (D7C and D12C only)	1, 3, 4	“MID 128 PID 94 Fuel Delivery Pressure” page 106
MID 128-PID 100	Engine Oil Pressure	1, 3, 4	“MID 128 PID 100 Engine Oil Pressure” page 110
MID 128–PID 102	Boost Pressure	3, 4	“MID 128 PID 102 Boost Pressure” page 114
MID 128–PID 105	Boost Air Temperature	3, 4	“MID 128 PID 105 Boost Air Temperature” page 118
MID 128–PID 107	Air Filter Differential Pressure	0, 3, 4, 5	“MID 128 PID 107 Air Filter Differential Pressure” page 122
MID 128–PID 108	Atmospheric Pressure	3, 4	“MID 128 PID 108 Atmospheric Pressure” page 125
MID 128–PID 110	Engine Coolant Temperature	0, 3 ,4	“MID 128 PID 110 Engine Coolant Temperature” page 126
MID 128–PID 111	Coolant level	1	“MID 128 PID 111 Coolant Level” page 129
MID 128–PID 158	Battery Voltage	3	“MID 128 PID 158 Battery Voltage” page 131
MID 128–PID 172	Air Inlet Temperature	3, 4	“MID 128 PID 172 Air Inlet Temperature” page 133
MID 128–PID 174	Fuel Temperature (D7C and D12C only)	3, 4	“MID 128 PID 174 Fuel Temperature” page 136

MID 128 PID 110 Engine Coolant Temperature, Check

Special tools: J-43233, J-39200, J-41132, 9998534

NOTE!

Check all the particular connectors for loose connections as well as for switch resistance and oxidation.

For detailed circuit information, refer to “VNL, VNM Electrical Schematics,” Group 37.

Measurement at the component’s connector, to the EECU

1
Note: An incorrect value (below) can also cause the component to fail; therefore, it is important to check the component if any of the values are incorrect.

2
Disconnect the connector to the coolant temperature sensor. Install breakout harness 9998534 to the wiring harness end only. — 9998534

Ground wire:

3
Measure the resistance with ohmmeter J-39200. — J-39200

Ignition key must be in the OFF position.

Measuring points	Optimal value
2 / alternate ground	<1 Ω

Signal wire:

4
Measure the resistance with ohmmeter J-39200. — J-39200

Ignition key must be in the OFF position.

Measuring points	Optimal value
1 / alternate ground	1.4 kΩ

Check of component

Coolant temperature sensor

1
Disconnect the connector to the coolant temperature sensor. Install breakout harness 9998534 to the sensor harness only. — 9998534, J-39200

Measure the resistance with ohmmeter J-39200.

Ignition key must be in the OFF position.

Note: For coolant temperature/resistance chart, see “Coolant Temperature Sensor, Temperature/Resistance Chart” page 128.

Measuring points	Optimal value
1 / 2	1.9 kΩ (20 °C/68 °F)
1 / 2	160 Ω (85 °C/185 °F)
1 / alternate ground	open circuit
2 / alternate ground	open circuit

Check of Subsystem

Coolant temperature

1
Ignition key must be in the ON position. — J-41132, J-43233, J-39200
Connect breakout box J-41132 in series between connector EA and the EECU. Connect jumper harness J-43233 in series between connector EB and the EECU.

Measuring points	Optimal value
EA25 / EA5	3.0 V (20 °C/68 °F)
EA25 / EA5	0.6 V (85 °C/185 °F)

Note: For coolant temperature/resistance chart, see “Coolant Temperature Sensor, Temperature/Resistance Chart” page 128.

MID 128 PPID 122 VCB Engine Compression Brake, Check

Special tools: J-43233, J-39200, J-41132

D12B and D12C

NOTE!

Check all the particular connectors for loose connections as well as for switch resistance and oxidation.

For detailed circuit information, refer to “VNL, VNM Electrical Schematics,” Group 37.

Measurement at the component’s connector, to the EECU

1
Note: An incorrect value (below) can also cause the component to fail; therefore, it is important to check the component if any of the values are incorrect.

2
Disconnect the two wires at the compression brake solenoid. The compression brake solenoid is located under the valve cover.

“Ground wire”/Control wire:

3
Measure the resistance with ohmmeter J-39200. J-39200

Ignition key must be in the OFF position.

Measuring points	Optimal value
Ground control wire / alternate ground	215 kΩ

Supply wire:

4
Measure the voltage with voltmeter J-39200. J-39200

Ignition key must be in the ON position.

Measuring points	Optimal value
Supply wire / alternate ground	B+

Check of component

Compression brake solenoid, VCB

1
Disconnect the two wires at the compression brake solenoid. The compression brake solenoid is located under the valve cover. J-39200

Measure the resistance with ohmmeter J-39200.

Ignition key must be in the OFF position.

Measuring points	Optimal value
Solenoid terminal A / B	21 Ω
A / alternate ground	open circuit
B / alternate ground	open circuit

Check of Subsystem

Compression brake, VCB

1
Ignition key must be in the ON position. J-41132
Connect breakout box J-41132 in series between connector EA and the EECU. Connect jumper harness J-43233 in series between connector EB and the EECU. J-43233 J-39200

Note: Test with “VCB On” can be performed only if the EECU has requested VCB operation.

Measuring points	Optimal value
EA33 / alternate ground	B+ (VCB off)
EA33 / alternate ground	0 V (VCB on)
ground terminal EA33 with a jumper wire	VCB solenoid clicks on

MID 144 SID 230 Idle Validation Switch 1, Check

Other special equipment: J-39200, 9998551, J-43340, J-41133, J-43234

NOTE!

- Read off the other fault codes for the VECU.
- Check the particular connectors during the fault tracing for oxidation and switch resistance. For detailed circuit information, refer to “VNL, VNM Electrical Schematics,” Group 37.

Appropriate Tests in the VCADS Pro Tool

The following test(s) are useful for closely examining the component’s function:

27102–8 Accelerator pedal, switches and sensor, test

Measurement at the Component’s Connector, to the VECU

Note: Faults in the wiring harness to the VECU can damage the component. Therefore, a check of the component should also be made if any of the measurement values deviate from the expected value.

1
Disconnect the connector at the accelerator pedal. Install 5-pin breakout harness J-41133 to the wiring harness end only. J-41133

Supply wire:

2
Turn the ignition key to the ON position.

3
Connect a voltmeter to the breakout harness pins and measure the voltage. J-39200

Measuring points	Expected value
Pin D / alternate ground	B+

Signal wire:

4
Turn the ignition key to the OFF position.

5
Connect an ohmmeter to the breakout harness pins and measure the resistance. J-39200

Measuring points	Expected value
Pin C / alternate ground	1.2 ± 20% kΩ

Wiring harness

6
To check the wiring harness, refer to “VNL, VNM Electrical Schematics,” Group 37.

Check of Component

Idle validation switch 1

Note: Faults in the component can be caused by faults in the wiring harness of the VECU. A check of the wiring harness should also therefore be made before connecting a new component.

1
Disconnect the connector at the accelerator pedal. Install 5-pin breakout harness J-41133 to the accelerator pedal harness only. J-41133

2
Turn the ignition key to the OFF position.

3
Connect an ohmmeter to the breakout harness pins and measure the resistance.

Measuring points	Expected value
Pin C / Pin D	open circuit (accelerator at idle)
	20-90 Ω (full acceleration)

4

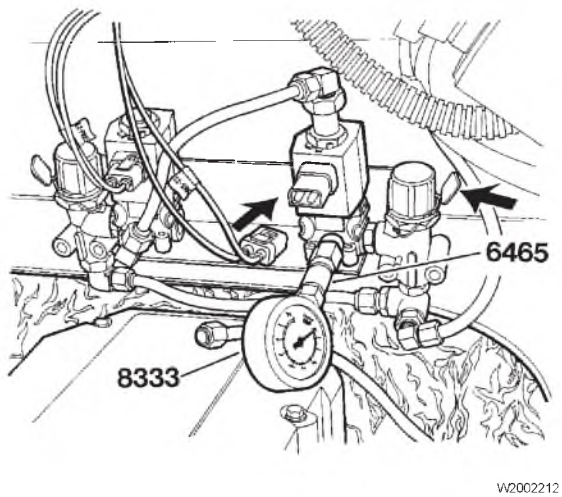

If the pressure is too high, go to step 4.
If the pressure is too low, go to step 5.

Note: Trucks with a higher system pressure than 7.5 bar (109 psi) are equipped with an adjustable reduction valve to reduce the pressure to the exhaust pressure governor.

5
Adjust the valve setting to specified pressure. If pressure will not respond to adjustment, replace regulator. After adjustment, the knob on the valve should be sealed or made tamper proof.

6
Check the outlet pressure of the regulator going to the exhaust brake solenoid.
Intended value: 752 ± 30 kPa (109 ± 4.4 psi)

7
Pressure OK:

- Restriction in line from regulator valve to exhaust brake solenoid. (VN series)
- Faulty solenoid.

8
Pressure not OK:

- Regulator valve out of adjustment or faulty.
- Insufficient supply pressure.

Test 5

1
Remove the exhaust pipe from the shutter housing.

2

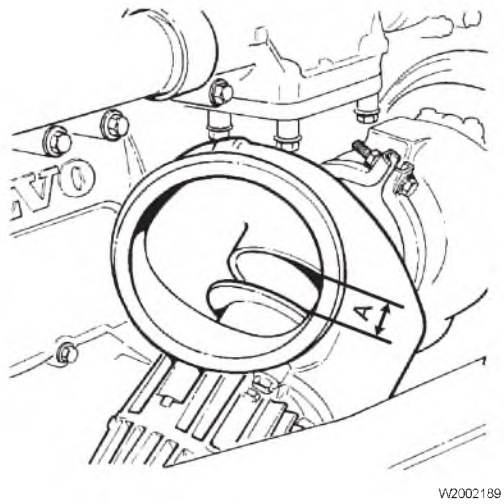

Measure the opening between the shutter disk and shutter housing (A), to check that the EPG shutter has not jammed in the closed or half-closed position.
The value (measurement A) should be 30 ± 2 mm (1.18 ± .08 in).

3
If the value is correct, replace or overhaul the EPG in accordance with the procedures found in:

Service Manual	V776–250–600SM *Intake and Exhaust Systems, VE D12*

4
Activate the exhaust brake solenoid valve.