GENERAL INFORMATION

HOW A COMBINE WORKS

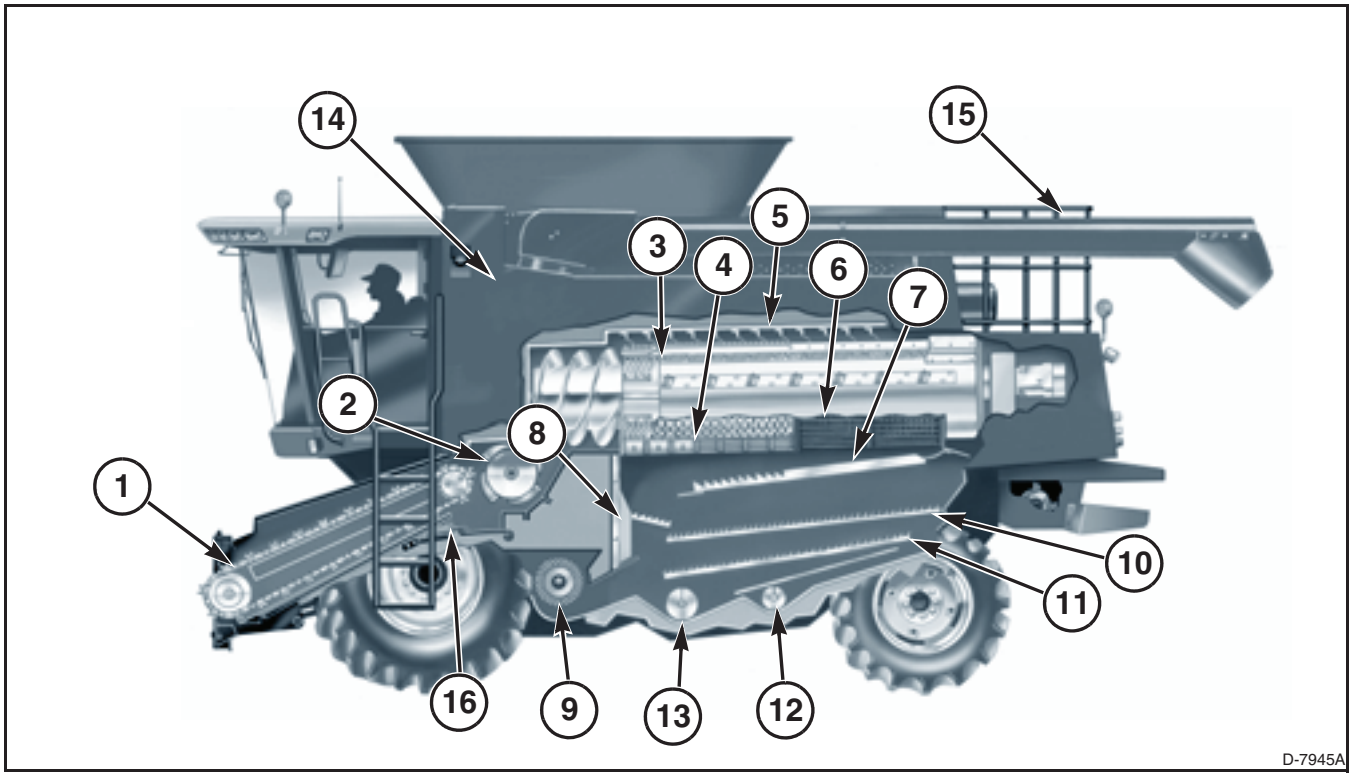

FIG. 69

FIG. 69: Four functions are done in the overall harvesting operation of a combine. These are:

- Cutting and Feeding
- Threshing
- Separating
- Cleaning

Cutting and Feeding

The crop is gathered by a header which is supported by the feeder housing.

The grain header uses a reel to direct the crop into the header auger after the crop is cut by the knife and the header auger moves the crop into the feeder (1).

When a pickup header is used, the crop, already cut and laying in a swath, is lifted by a pickup and fed to the header auger where the retractable fingers move the crop into the feeder.

The feeder elevator transports the crop to the front of the accelerator beater (2) which moves the crop to the rotor inlet area and the rotor (3). The feed beater also guides rocks and other foreign objects into the stone trap (16) located forward and below the beater.

FIG. 58

FIG. 58: Combine front view.

FIG. 59

FIG. 59: Combine rear view.

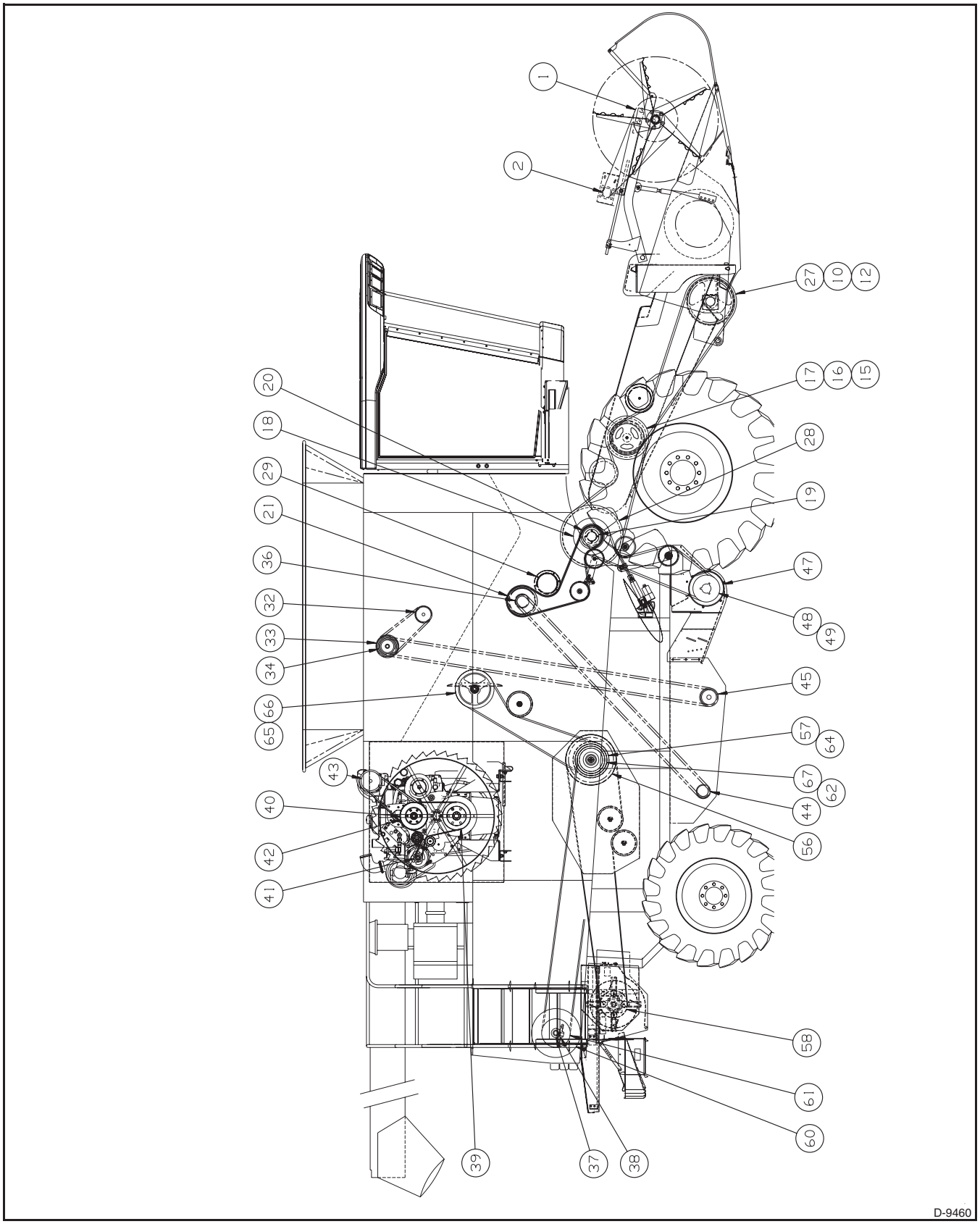

FIG. 135

FIG. 135: Right-hand drives and speeds.

DRIVES SPEEDS AND SPECIFICATIONS

No.	Shaft	Drive(n)	RPM	Pitch Dia.	Type
1.	Reel Shaft	Driven	4-51	394.26	78T-50
2.	Reel Motor	Drive	20-248	81.38	16T-50
3.	Wobble Box	Driven	624	239.84	HC
4.	Header Conveyor	Driven	152	394.26	78T-50
5.	Header Countershaft - Wobble Box	Drive	624	239.84	HC
6.	Header Countershaft - Header Conv.	Drive	624	96.44	19T-50
7.					
8.					
9.	Feeder Countershaft - Fixed Speed	Drive	613	229.84	HC
10.	Feeder Countershaft - Inner Variable Speed	Driven	609-974	445.26-363.58	HM
11.	Top Feeder Shaft - Fixed Speed	Driven	369	378.84	HC
	Top Feeder Shaft - Variable Speed	Drive	229-366	438.84-378.84	
12.	Feeder Countershaft - Outer Variable Speed	Driven	609-974	445.26-363.58	HM
13.	Bin Unloader	Driven	1281	355.60	2B-PB
14.	Main Countershaft - Bin Unloader	Driven / Drive	1479	480.0/ 308.10	3B-PB/ 2B-PB
15.	Jackshaft to Feeder Countershaft - Variable Speed	Drive	924	298.70-382.78	HM
16.	Jackshaft to Feeder Countershaft - Variable Speed	Driven / Drive	924	382.78/ 298.70-382.78	2C-PB/ HM
17.	Jackshaft to Feeder Countershaft - Fixed Speed	Driven / Drive	924	382.78/ 303.30	2C-PB/ 3C-PB
18.	Thresher Beater - V/S Fan Drive	Drive	641	314.54	HI
19.	Thresher Beater - V/S Fan Drive	Drive	641	210.45	HI
20.	Thresher Beater - Tailings Elevator	Drive	641	187.96	HBB
21.	Tailings Elevator	Driven	452	266.70	HBB
22.	Hydrostatic Pump - Rotor and Propulsion (Class VI)	Driven	3308	262.70	4B-PB
22.	Hydrostatic Pump - Rotor (670)	Driven	3100	262.70	4B-PB
23.	Hydrostatic Pump - Propulsion (670)	Driven	2850	285.75	3B-PB
24.	Pinion, Turret Horizontal Shaft	Drive	1281		16T-Bevel
25.	Turret Vertical Auger Gear	Driven	586		35T-Bevel
26.	Engine PTO (660)	Drive	2200	395.00 322.69	4B-PB 3B-PB
26.	Engine PTO (670)	Drive	2100	387.80 338.06	4B-PB 3B-PB
27.	Feeder Countershaft - Fixed Speed	Driven	613	457.2	2C-PB
28.	Thresher Beater - Feeder Countershaft Drive	Drive	641	551.50	2C-PB
29.	Returns Elevator Upper Auger	Driven	535	225.30	HBB

FIG. 801: Serial Number HP36101 to HR36999 - Position the tooth centerline of the left-hand (1) and of the right-hand (2) sprocket to a dimension (A) of 74.6 mm (2.937 in) from the inside surface of the pivot housings.

Position the center sprocket (3) to a dimension (B) of 632.7 mm (24.91 in) from each outside sprocket.

Torque the set screws to 54 to 68 Nm (40 to 50 lbf ft) and tighten the jam nuts.

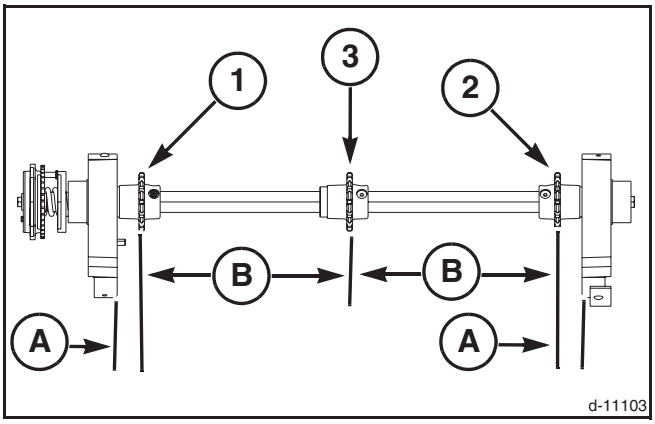

FIG. 801

FIG. 802: Serial Number HS36101 and Later - Position the tooth centerline of the left-hand (1) and of the right-hand (2) sprocket to a dimension (A) of 74.6 mm (2.937 in) from the inside surface of the pivot housings.

Position a center sprocket (3) to a dimension (B) of 421.8 mm (16.6 in) from each outside sprocket.

Torque the set screws to 54 to 68 Nm (40 to 50 lbf ft) and tighten the jam nuts.

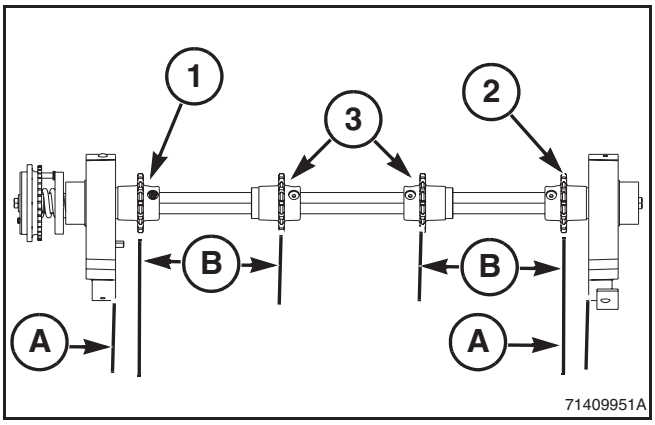

FIG. 802

FIG. 803: Serial Number HP87101 and Later - Position the tooth centerline of the left-hand (1) and of the right-hand (2) sprocket to a dimension (A) of 74.6 mm (2.937 in) from the inside surface of the pivot housings.

Position the center sprocket (3) to a dimension (B) of 489.2 mm (19.26 in) from each outside sprocket.

Torque the set screws to 54 to 68 Nm (40 to 50 lbf ft) and tighten the jam nuts.

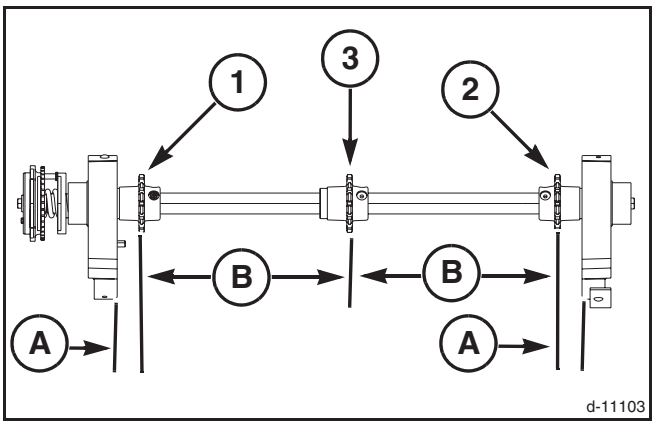

FIG. 803

FIG. 804: Install the conveyor chain around the pivot shaft sprockets (1). Install the connecting pin and the connecting pin nut (2). Torque the connecting pin nut to 6.8 Nm (5 lbf ft).

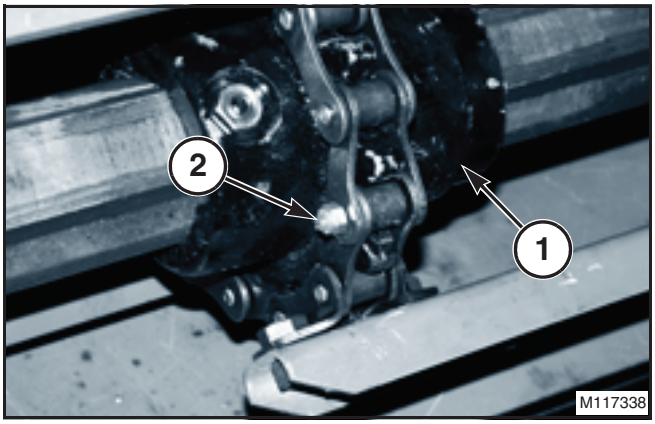

FIG. 804

FIG. 1285: Using a suitable driver, press the bearing (1) from the gearbox housing.

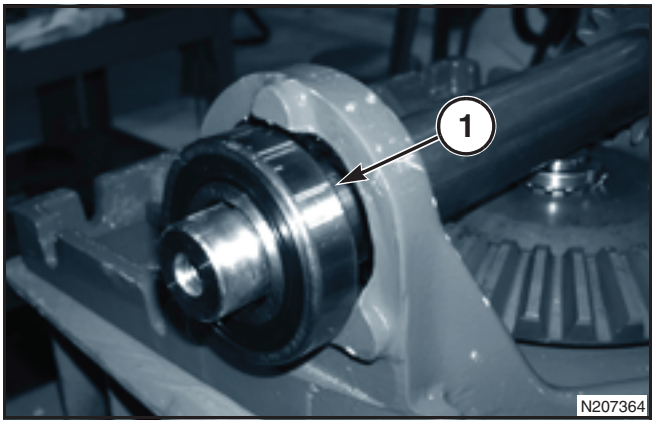

FIG. 1285

FIG. 1286: Press the input shaft (1) out of the gearbox housing. Remove the woodruff key (2), pinion gear (3), and spacer (4).

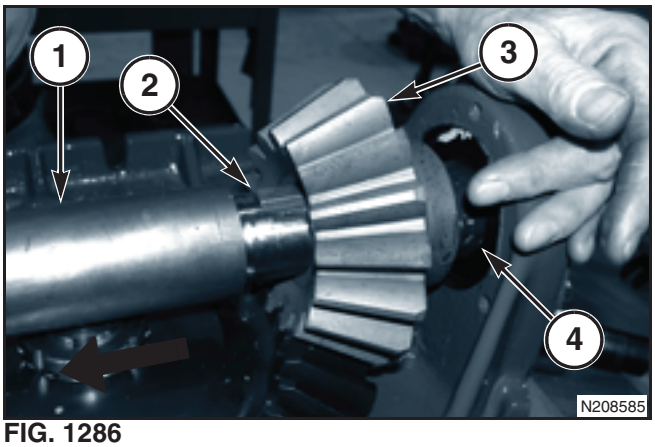

FIG. 1286

FIG. 1287: Using a suitable driver, press the remaining bearing (1) from the gearbox housing.

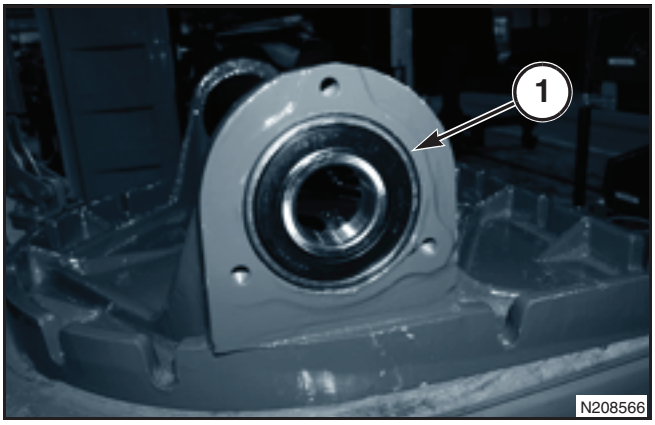

FIG. 1287

FIG. 1288: Bend the locking tab on the external tooth lock washer, locking the lock nut (1) to the output shaft, away from the lock nut.

Using a spanner wrench (2) remove the lock nut.

Using a suitable puller remove the bevel drive gear (3).

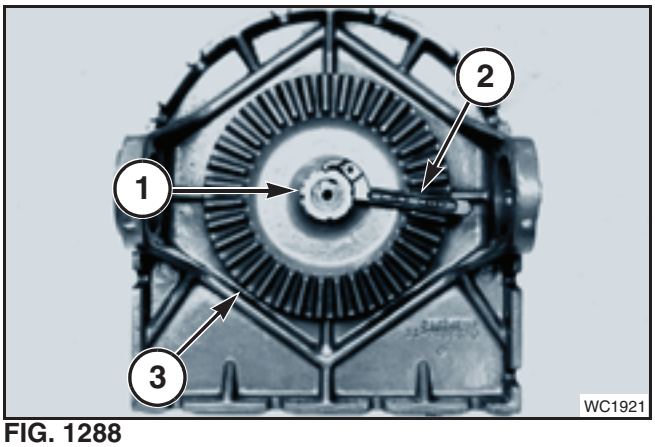

FIG. 1288

Assembly

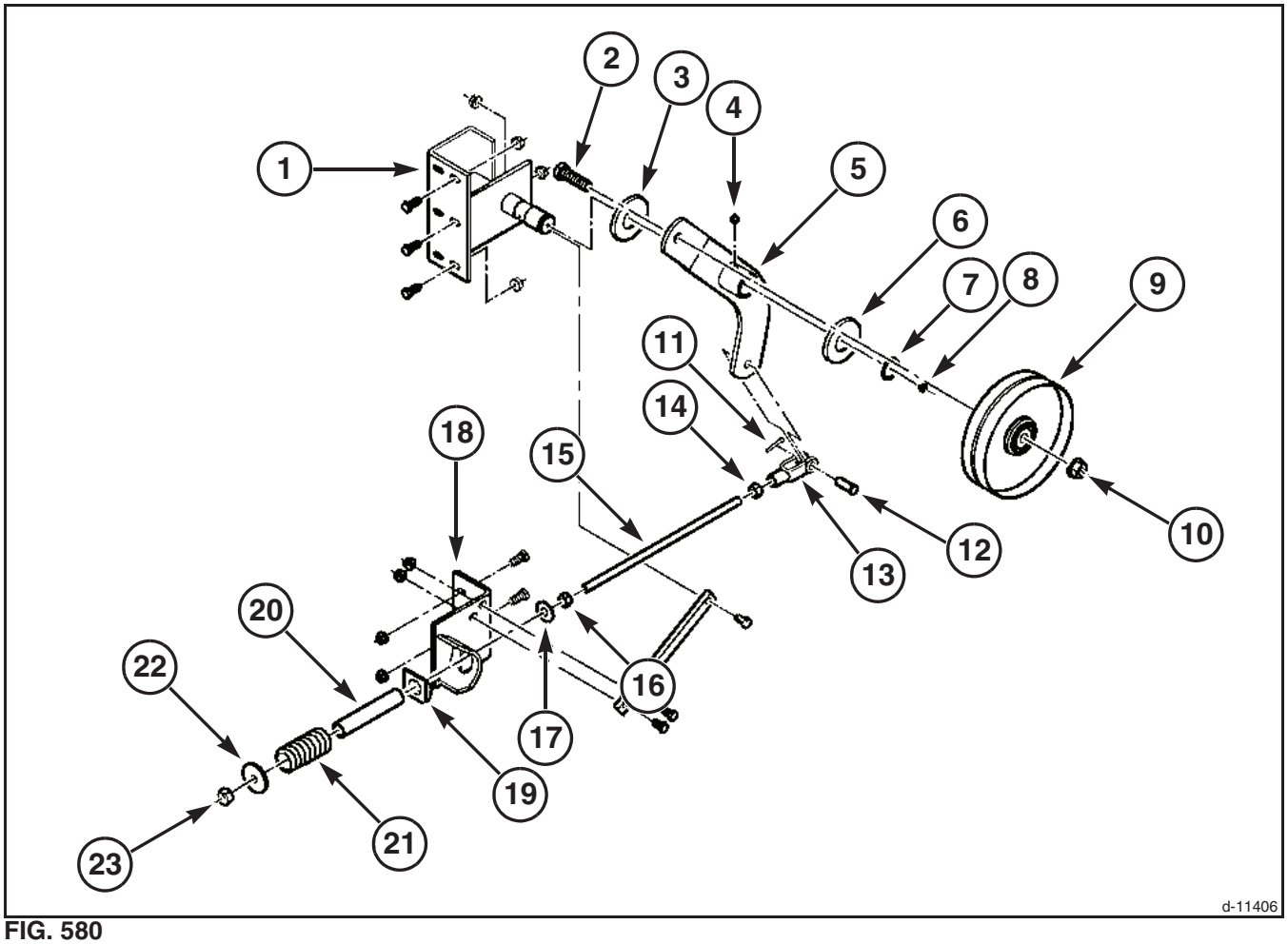

FIG. 580

FIG. 580: Tensioner Assembly - Slide the threaded rod (15) with jam nut (16) and washer (17) into the rod anchor bracket (18). Slide the pivot block (19), spring spacer (20), and spring (21) onto the threaded rod. Install the washer (22) and nut (23) on the threaded rod.

Install the jam nut (14) on the threaded rod. Install the yoke (13) onto the threaded rod until the threaded rod fully engages the threads of the yoke. With the threads of the yoke fully engaging the threaded rod tighten the jam nut against the threaded rod to lock the yoke in position.

Tensioning Idler Arm - Install the lubrication fitting (4) into the tensioning idler arm (5). Make sure the lubrication passage in the tensioning idler arm is open and that the tensioning idler arm is taking grease.

Install the lubrication fitting (8) into the pivot bracket assembly (1). Make sure the lubrication passage in the pivot bracket assembly is open and that the pivot bracket assembly is taking grease.

Slide the shim washer (3), tensioning idler arm, and washer (6) onto the pivot bracket assembly. Install the retaining ring (7) fastening the washer, tensioning idler arm and shim washer to the pivot bracket assembly. Make sure the retaining ring is seated in the retaining ring groove in the pivot bracket assembly.

Install the clevis pin (12) into the yoke (13) and tensioning idler arm fastening the tensioning idler arm to the tensioner assembly. Install the cotter pin (11) into the clevis pin.

Tensioning Idler Sheave - Install the capscrew (2) into the tensioning idler arm. Slide the tensioning idler sheave (9) onto the capscrew. Install the lock nut (10) fastening the tensioning idler sheave to the tensioning idler arm.

Install the pitman drive belt as shown in this section of the manual.

FIG. 307: Tighten the fine adjustment knob (1), approximately 10 turns, to take up the remaining slack.

Engage and release the parking brake several times to be sure that the right-hand and the left-hand brake actuators are fully releasing when the parking cable is released.

Adjust parking brake performance by using the fine adjusting knob on the parking brake lever. Always turn the knob with the lever in the disengaged position.

WARNING: Do Not over tighten the parking brake cable adjustment. Excessive tension can cause cable damage or abnormal wear. Improper adjustment can cause seizure of the brake assemblies resulting in difficulty in steering or aggressive stopping of the combine.

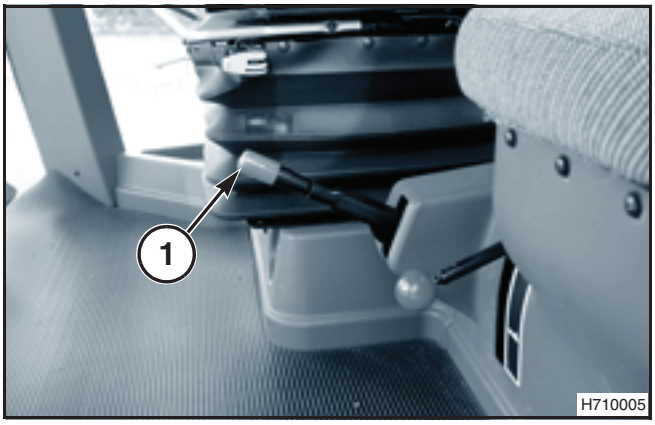

FIG. 307

FIG. 308: Remove the caps and plugs used to seal the brake lines during removal.

Connect the right-hand and the left-hand transmission brake lines to the connectors (1).

IMPORTANT: Bleed and adjust the brakes as shown in the Brakes section of the Front Axle Division.

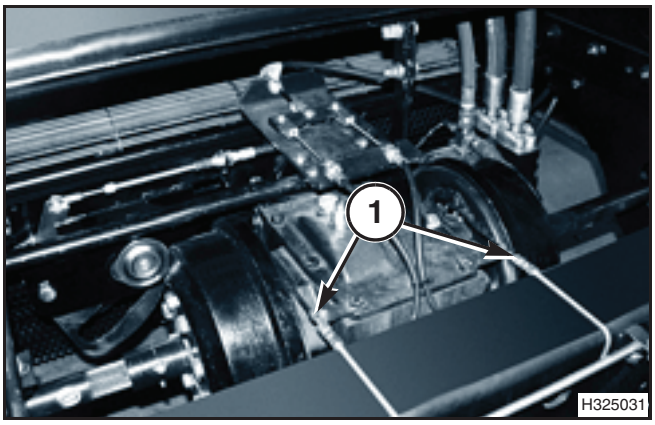

FIG. 308

FIG. 309: Add hydraulic oil through the oil fill plug hole (1) until the oil level is up to the bottom of the oil level hole. Install the plugs securely.

WARNING: NEVER operate the combine or allow others to operate the combine unless ALL SHIELDS supplied with the combine and the combines attachments are PROPERLY IN PLACE.

Operate the combine and be sure that the transmission fully engages the detent position in each gear. Be sure that the complete braking system functions properly.

After operating the combine for a short period of time, check for oil leaks, and correct any found.

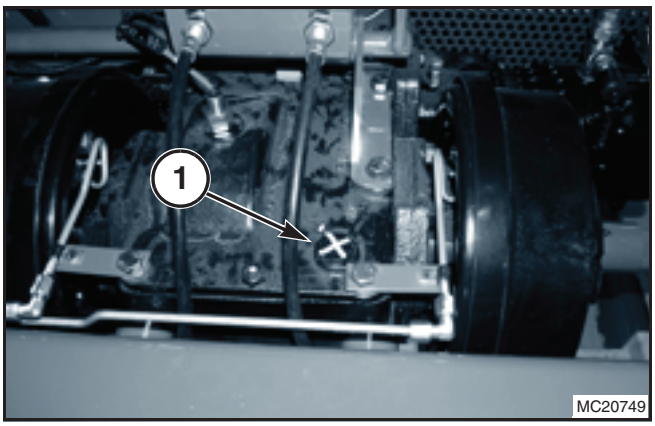

FIG. 309

Countershaft Installation

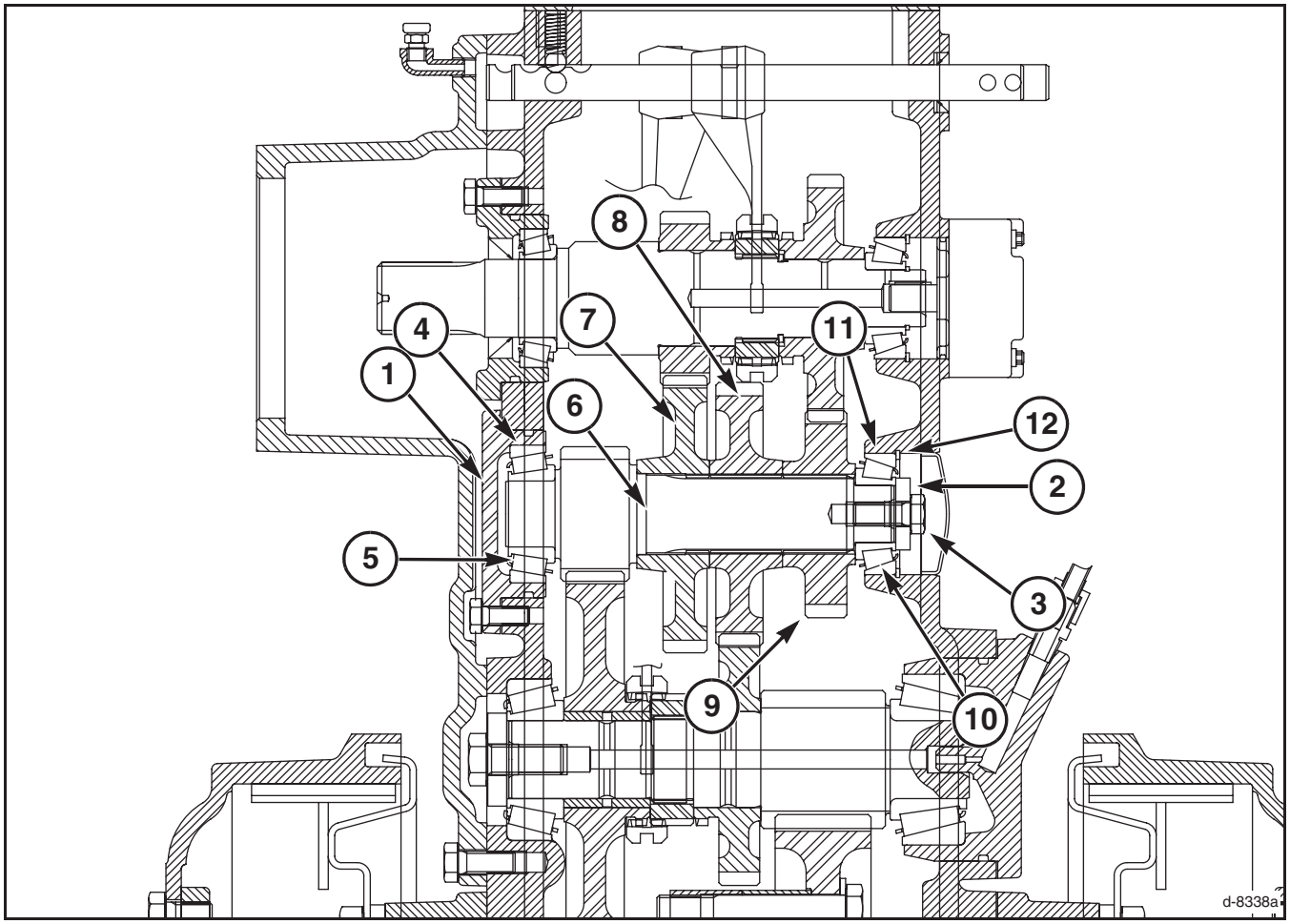

FIG. 417

FIG. 417: The housing must be clean before starting assembly.

Install the retaining ring (12) in the right-hand side of the transmission housing. Drive the right-hand bearing cup (11) against the retaining ring with the wide edge of the cup facing the retaining ring.

Press the left-hand bearing cone (5) onto the left end of the countershaft (6) with the large face of the cone against the shoulder on the shaft.

Put the 45 tooth gear (7) onto the right end of the shaft with the long hub facing toward the shoulder on the shaft followed by the 42 tooth gear (8) with the long hub facing away from the 45 tooth gear. Put the 32 tooth gear (9) onto the right end of the shaft with the long hub facing toward the 42 tooth gear.

Press the bearing cone (10) onto the right end of the shaft with the large face of the cone against the 32 tooth gear (9).

Clean and apply Primer N to the tapped hole in the countershaft (6) and the threads on the special capscrew (3). Permit the Primer N to dry. Apply four drops of the high strength permanent retaining compound on the threads of the capscrew before installation.

Put the countershaft washer (2) on the full thread capscrew. Install the capscrew into the countershaft. Torque the capscrew to 91 Nm (65 lbf ft).

Put this assembly into the housing.

Press the left-hand bearing cup (4) into the bearing carrier (1) with the wide edge of the cup facing the carrier until the cup is seated.

Clean and apply Primer N to the mounting holes in the transmission housing and the threads on the four mounting capscrews. Permit the Primer N to dry.

Apply four drops of a high strength permanent retaining compound on the threads of the capscrews before installation.

Install the bearing carrier into the transmission housing. Secure the carrier using four capscrews. Torque the capscrews to 52 Nm (38 lbf ft).

REEL LIFT CYLINDERS

REEL LIFT MASTER CYLINDER

Removal From Header

FIG. 413: Block the reel arm (2) securely in mid position.

Relax all hydraulic pressure.

Remove the cotter pin from the pin retaining the cylinder stop (4). Remove the pin and then the cylinder stop.

Slowly and carefully loosen the hydraulic line fittings; then remove and plug the lines (1).

Remove the cotter pins from the top and the bottom pins retaining the lift cylinder.

Remove the top and the bottom pins and remove the cylinder (3) from the header.

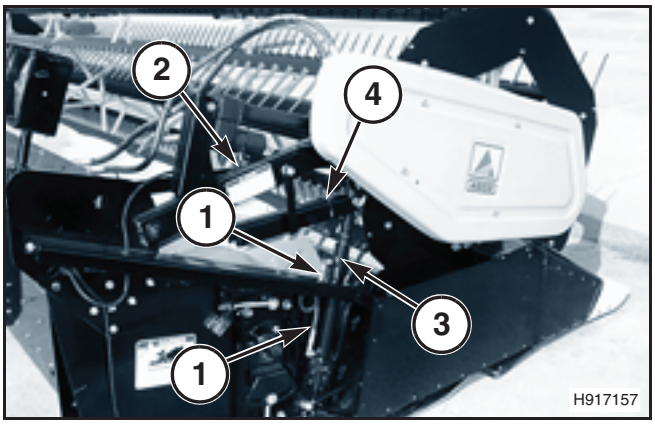

FIG. 413

Installation On Header

FIG. 414: Place the cylinder on the header with the oil ports pointed to the rear and the base end of the cylinder to the header side frame.

Install the pin, with the head to the inside of the header, retaining the base end of the cylinder. Install a cotter pin to retain the pin.

NOTE: The head of all pins must be positioned to the inside of the header to avoid the obstruction of crop flow.

Pin the rod end of the cylinder to the reel arm with the head to the inside of the reel arm. Install a cotter pin to retain the pin.

Connect the hydraulic lines (1) as shown.

Raise the reel to full height. Install the cylinder stop so that the stop fully contacts and surrounds three sides of the cylinder rod. Pin the cylinder stop, with the head to the inside of the reel arm, to the second hole from the end of the rod eye. Install a cotter pin to retain the pin. Place the cylinder stop in the latch.

NOTE: Be sure the wire retainer spring is over the cylinder stop and that the ends of the spring drop into the slots in the cylinder stop.

Raise the reel and remove the blocking.

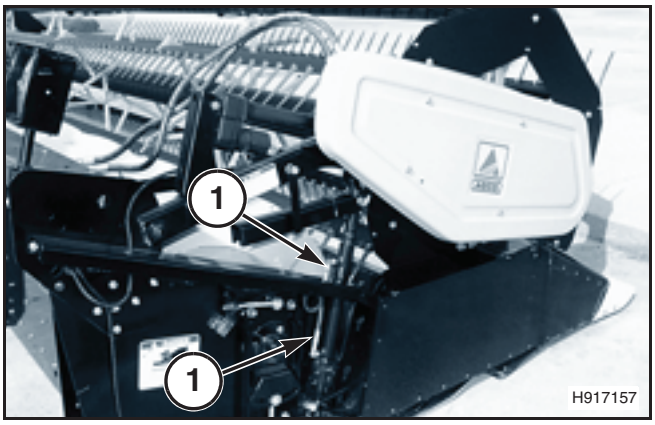

FIG. 414

Pump Charge Pressure Relief Valve Adjustment

FIG. 703: Charge oil is used to make up oil lost through leakage in the high-pressure circuits. Excess charge oil is dumped directly to the pump case by the charge relief valve (1).

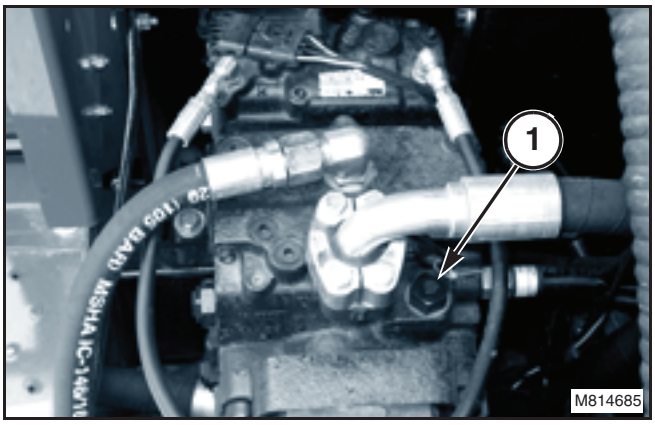

FIG. 703

FIG. 704: To measure the charge pressure, install a 50 bar (1000 psi) gauge in the charge pressure test port M3.

NOTE: Operate the system with the pump in neutral and at rated engine speed when measuring the charge pressure. Charge pressure is nominally set referencing case pressure.

The relief valve should maintain a charge pressure of 23.1 to 26.5 bar (335 to 385 psi) above case pressure when the system is in good condition.

Also, install a 10 bar (100 psi) gauge to measure case pressure into a tee installed into a case drain port L1 or L2.

Case pressure 1.4 to 2.8 bar (20 to 40 psi) is the result of resistance to oil flow imposed by the return lines and the oil cooler. The case pressure can be checked at any drain port of the pump or motor.

NOTE: The hydraulic reservoir oil temperature must be 49 degrees C (120 decrees F) minimum when recording the pump charge pressure readings.

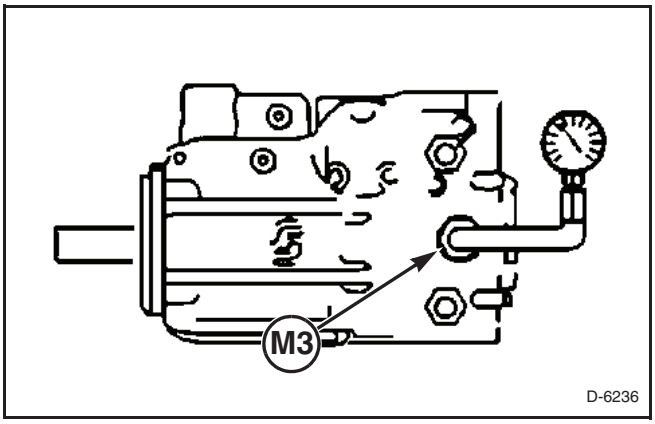

FIG. 704

FIG. 705: The charge pressure relief is adjusted by loosening the lock nut (1) and turning the adjustment plug (2). Clockwise rotation of the plug increases the setting and counter-clockwise rotation decreases the setting at a rate of approximately 3.4 bar (50 psi) per turn. The lock nut should be torqued to 52 Nm (38 lbf ft).

Once the desired charge pressure setting is achieved, remove the gauges.

Check the hydraulic reservoir oil level and add oil as found necessary.

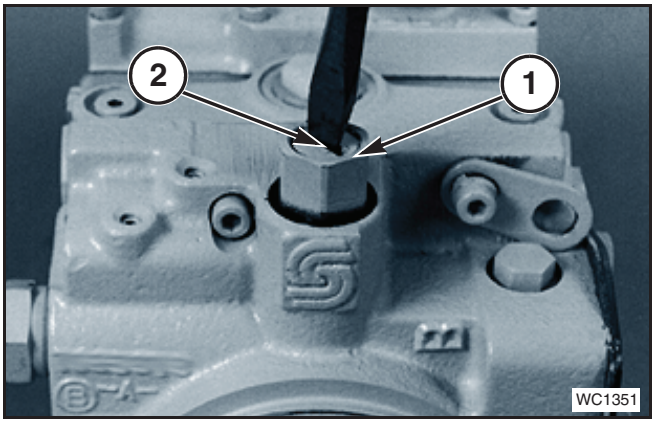

FIG. 705

Data Bus

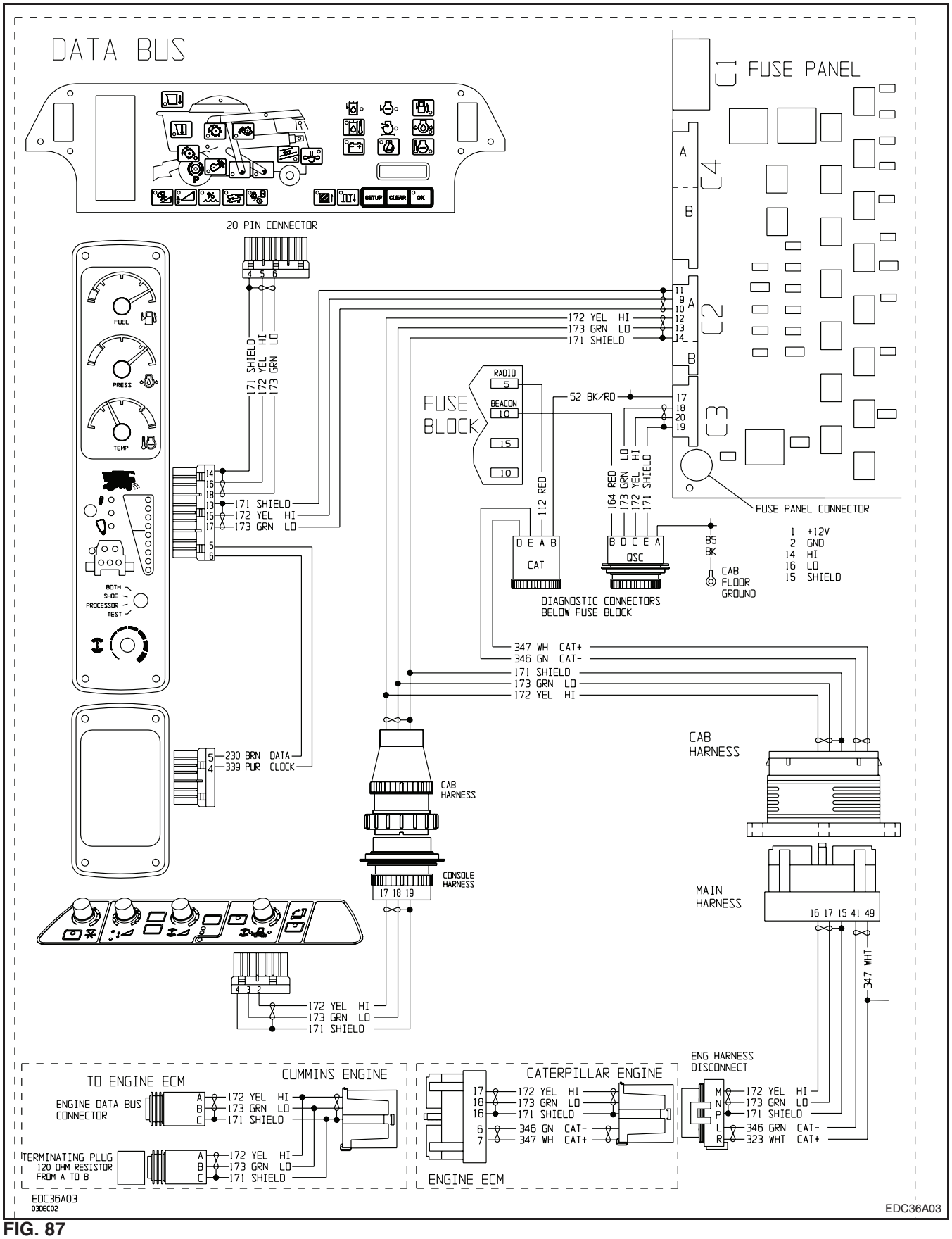

FIG. 87

FIG. 87: Data Bus

Legend - Air Conditioner/Blower, Windshield Wiper

Abbreviation	Description
A/C SWITCH	Air conditioning switch
AIR COND COMPRESSOR CLUTCH	Air conditioner compressor clutch
AIR CONTROL SWITCH	Air control switch
BACKLIGHT	Backlight
BLOWER CONTROL	Blower control
BLOWER MOTOR	Blower motor
CAB POWER FEED DISCONNECT	Cab power feed disconnect
COLD CONTROL THERMOSTAT (FIXED)	Cold control thermostat (fixed)
ENG HARNESS DISCONNECT	Engine harness disconnect
FUSE	Fuse
RELAY	Relay
RESISTOR	Resistor
TEMP CONTROL	Temperature control
THERMOSTAT SWITCH	Thermostat switch
TO HEADLIGHT SW	To headlight switch
TO WIPER SW	To wiper switch
UPPER CONSOLE	Upper console
WATER VALVE	Water valve
WATER VALVE CONTROL	Water valve control
WIPER MOTOR	Wiper motor
WIPER SWITCH	Wiper switch

Notes

(A) - Low pressure cutout switch closed at pressure above 5 pounds (approximately).

(B) - High pressure switch open at pressure above 375 pounds (approximately).

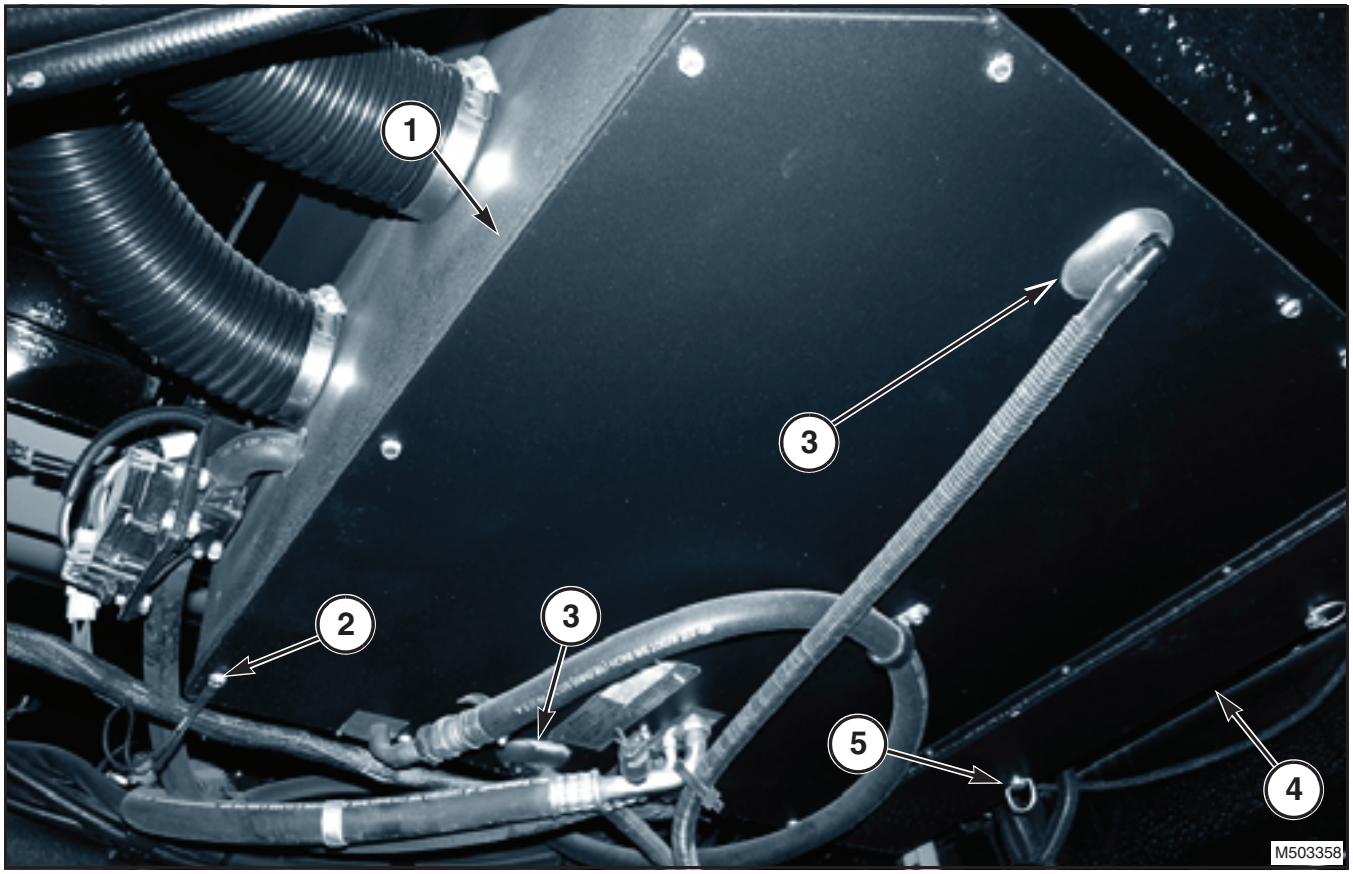

FIG. 351

FIG. 351: Check the condition and the location of all the seals (evaporator, heater core, cover, expansion valve, heater line, etc.) and put the cover onto the housing.

IMPORTANT: Poor sealing will result in reduced performance or dirt intake into the heating and air conditioning module.

Making sure the drip pan is in position. Put the bottom cover (1) up to the bottom of the housing. Move the cover rearward around the heater and air conditioning fittings, and over the drip pan fittings and push the cover up against the housing.

First, loosely secure the bottom cover to the housing using screws.

Tighten all the screws.

NOTE: Secure the heating and air conditioning ground (2) at the right rear corner of the cover while installing the screws.

Install the two drain tubes (3) fastened to the evaporator drip pan.

Install the filter assembly. Secure the filter access panel (4) under the combine cab floor by closing the quarter turn fasteners (5).

PROBLEM / EFFECT	POSSIBLE CAUSE	CORRECTION
No heat in the heat mode.	**Harness connector pins and / or temperature control and valve module pins are:** - Bent or broken. - Pushed back or expanded pins. - Dirty pins. - Moisture in or on the connector. - Not the correct wire color and / or pin location.	Repair the damaged harness connector pins or replace the harness. Make sure the correct wire color and pin location. Replace the temperature control or water valve module if pins are damaged.
	No voltage at the water control valve: - Valve in the electric water control valve is open, partially closed, or closed. 1) Measure the voltage across the control valve pins A and C. 2) Measure the voltage from the control valve pin C to a ground. 3) Measure the voltage across the control valve connector pins A and B while an assistant slowly rotates the temperature control potentiometer in the cab control panel from full cool to full heat. 4) Circuit is open. - Do a continuity check on each leg of the circuit.	1) If VDC = +12V, go to step #3 2) If VDC = +0V, go to step #2 No heating and air conditioning Ground failure cause. 2) If VDC = +0V, go to step #4 1) If VDC varies through the full rotation, go to the Water Valve failure cause. 2) If VDC does not vary, go to No voltage at the temperature control failure cause. 1) If R is infinite, repair or replace the harness and / or connector. 2) If R = 0 ohms, repeat diagnosis.
Not able to control the temperature in any operating mode.	**No heating and air conditioning ground:** - Circuit is open. - Do a continuity check on each leg of the circuit.	1) Check for good ground leads crimped into a common terminal at the blower support baffle and at the heating and air conditioning bottom cover. 2) If R is infinite, repair or replace the harness and / or connector. 3) If R = 0 ohms, repeat diagnosis.
	No voltage at temperature control potentiometer: - Valve in the electric water control valve is open, partially closed, or closed 1) Measure the voltage across the control valve pins A and C. 2) Measure the voltage from the control valve pin C to a ground. 3) Measure the voltage across the control valve connector pins A and B while slowly rotating the temperature control potentiometer in the cab control panel from full cool to full heat. 4) Circuit is open. - Do a continuity check on each leg of the circuit.	1) If VDC = +12V, go to step #3 2) If VDC = +0V, go to step #2 1) If VDC = +12V, go to No Ground (Black / Potentiometer Low) failure cause. 2) If VDC = 0V, go to step #4 1) If VDC does not vary through the full rotation, go to Temperature Control Potentiometer failure cause. 2) If VDC does vary, go to No signal voltage from temperature control failure cause.