Foreword (- A.10.A.40)

AFX8010

Technical Information

This manual has been produced by a new technical information system. This new system is designed to deliver technical information electronically through CDROM and in paper manuals. A coding system called ICE has been developed to link the technical information to other Product Support functions e.g. Warranty.

Technical information is written to support the maintenance and service of the functions or systems on a customers machine. When a customer has a concern on his machine it is usually because a function or system on his machine is not working at all, is not working efficiently, or is not responding correctly to his commands. When you refer to the technical information in this manual to resolve that customers concern, you will find all the information classified using the new ICE coding, according to the functions or systems on that machine. Once you have located the technical information for that function or system then you will find all the mechanical, electrical or hydraulic devices, components, assemblies and sub-assemblies for that function or system. You will also find all the types of information that have been written for that function or system, the technical data (specifications), the functional data (how it works), the diagnostic data (fault codes and troubleshooting) and the service data (remove, install adjust, etc.).

By integrating this new ICE coding into technical information , you will be able to search and retrieve just the right piece of technical information you need to resolve that customers concern on his machine. This is made possible by attaching 3 categories to each piece of technical information during the authoring process.

The first category is the Location, the second category is the Information Type and the third category is the Product:

- LOCATION - is the component or function on the machine, that the piece of technical information is going to describe e.g. Fuel tank.
- INFORMATION TYPE - is the piece of technical information that has been written for a particular component or function on the machine e.g. Capacity would be a type of Technical Data that would describe the amount of fuel held by the Fuel tank.
- PRODUCT - is the model that the piece of technical information is written for.

Every piece of technical information will have those 3 categories attached to it. You will be able to use any combination of those categories to find the right piece of technical information you need to resolve that customers concern on his machine.

That information could be:

- the description of how to remove the cylinder head
- a table of specifications for a hydraulic pump
- a fault code
- a troubleshooting table
- a special tool

How to Use this Manual

This manual is divided into Sections. Each Section is then divided into Chapters. Contents pages are included at the beginning of the manual, then inside every Section and inside every Chapter. An alphabetical Index is included at the end of a Chapter. Page number references are included for every piece of technical information listed in the Chapter Contents or Chapter Index.

Each Chapter is divided into four Information types:

- Technical Data (specifications) for all the mechanical, electrical or hydraulic devices, components and, assemblies.
- Functional Data (how it works) for all the mechanical, electrical or hydraulic devices, components and assemblies.

HYDRAULIC SYSTEM

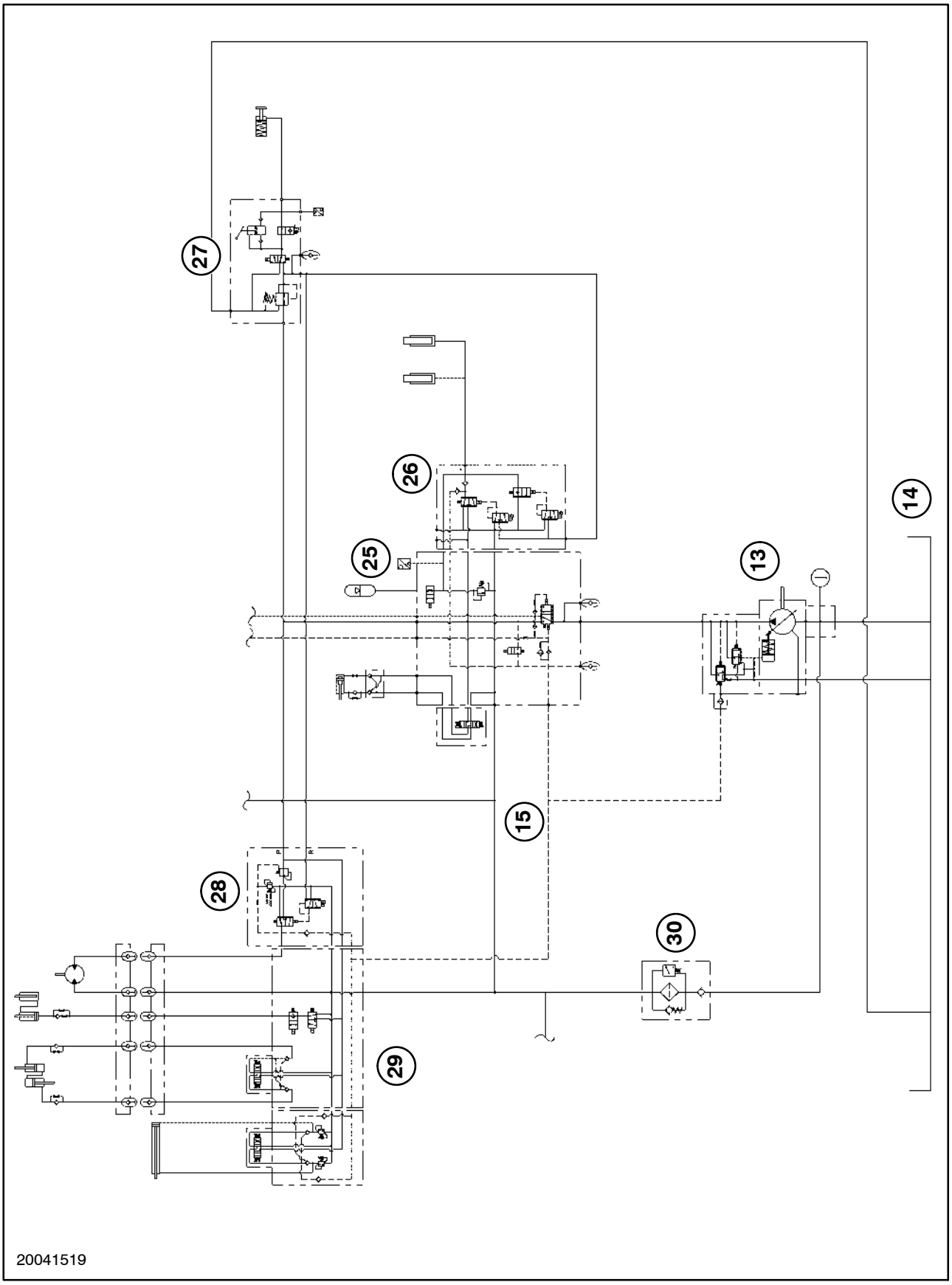

4

Steering Hand Pump

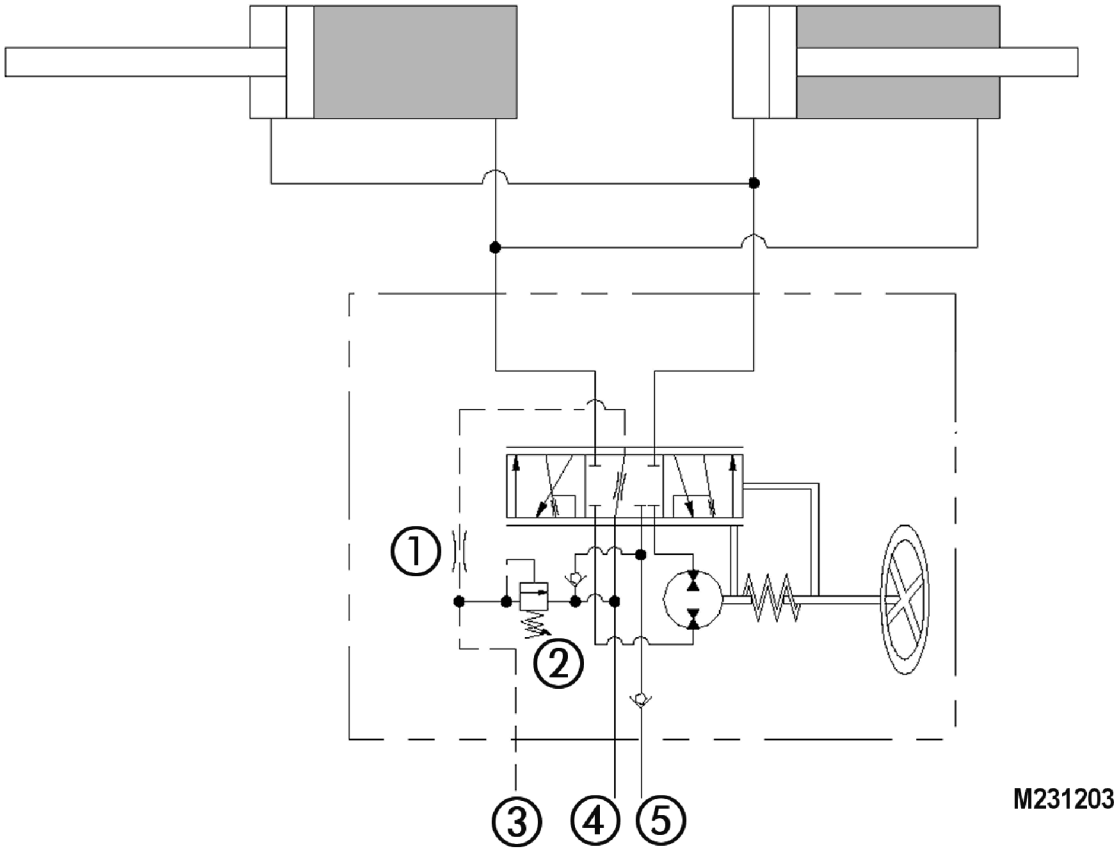

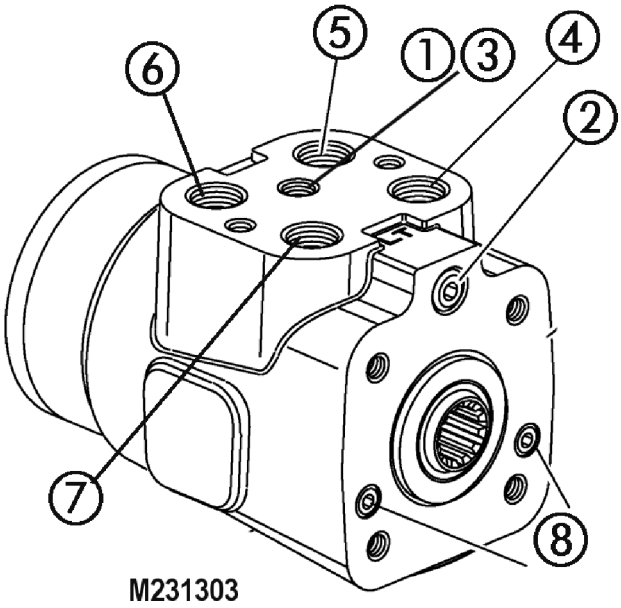

19

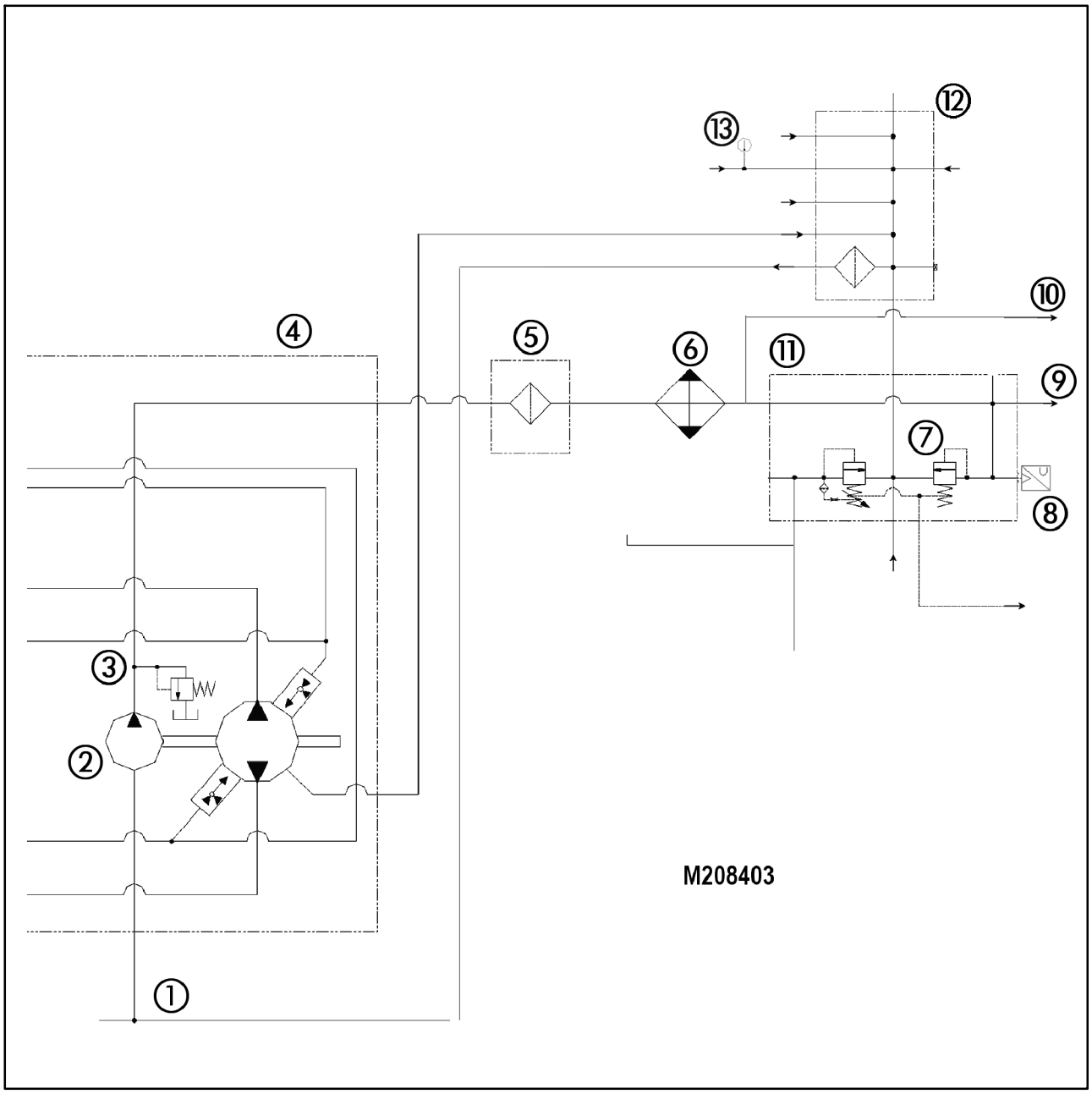

33

1. PTO Gearbox Reservoir
2. Lubrication Pump
3. Filter and Cooler Relief
4. Ground Drive Hydro. Pump
5. Lube Filter
6. Lube Cooler
7. Lube Relief
8. Lube Pressure Sensor
9. Lube to PTO Gearbox
10. Lube to PTO Gearbox
11. Control / Lube Regulator Valve
12. Return Manifold
13. Motor Temp. (ground drive motor) Sensor

Lubrication System

Electrical Monitoring Circuits
The system uses a sensor to monitor the systems operations.

Ground Drive Motor Temperature Sensor, (case drain)

Reference Material:
Electrical schematic frames #08, #26

Key Components:
Hydrostatic Motor Temperature Sensor B-46, CCM1

The ground drive motor temperature sensor monitors the oil temperature from the case drain of the ground drive hydrostatic motor. The sensor provides a constant temperature reading to the CCM1, the CCM1 then places a message on the data bus. If the temperature rises above specification the CCM1 will place a warning message on the data bus for the Universal Display Plus monitor to display, provide a warning to the operator. The temperature may be monitor on the Universal Display Plus monitor.

Power is supplied to the sensor from the CCM1 connector X020 terminal J3-31 to the B terminal and the sensors A terminal is directed back to the CCM1 connector X020 terminal J3-18. As the temperature increases the resistance of the sensor decreases, providing for a voltage drop on the supply wire. The signal voltage may be monitored on the Universal Display Plus monitor diagnostic screen.

Lubrication Pressure Sensor, (PTO Gearbox)

Reference Material:
Electrical schematic frames #10 and 26

Key Components:
CCM1, Lubrication Pressure Sensor B-60

The lubrication pressure sensor is mounted in the control / lubrication control valve block and is used to monitor the lube pressure to the PTO gearbox components. The sensor provides a constant pressure reading to the CCM1, then places a message on the data bus. If the pressure goes outside of the normal limits the CCM1 will place a message on the data bus for the Universal Display Plus monitor to display a warning to the operator. The pressure may be monitor on the Universal Display Plus monitor.

Power (5V) is supplied to the sensor from the CCM1 connector X019 terminal J2-31 to the B terminal and a sensor return (ground) from terminal A back to the CCM1 connector X019 terminal J2-14. The sensor provides a signal from terminal C to the CCM1 connector X019 terminal J2-29. The signal voltage may be monitored on the Universal Display Plus monitor diagnostic screen.

Turn/hazard light - Overview (A.40.A.13 - C.10.A.10)

AFX8010

HAZARD LIGHTS CIRCUIT

NOTE: *Failed bulbs, poor connections, or broken circuitry may cause the flashers to flash on and off at an irregular pace. If trailer lights are connected, the lighting system will function differently. For example, when trailer lights are connected to the lighting circuit, a bulb failure will have less affect on the operation of the circuit.*
Wiring harness - Electrical schematic frame 33 (A.30.A.88 - C.20.E.33) Current travels from the electrical system buss bar and passes through fuse F-56 (15-amp) and connector **X033** to reach a wire splice. The wire splice directs current to two different paths:
The first path sends current through connector **X255** to reach pin 1 of the Flasher Module (A-05). Current reaching pin 1 of the Flasher Module provides power for the module to function. The ground path exits pin 6 and travels through a wire splice and connector **X033** to reach the cab floor ground location #3. This provides power for the Flasher Module to function.
The second path sends current to pin 2 of the Hazard Switch (S-25).
When the hazard switch is moved to the ON position, current crosses from pin 2 to reach pin 3. An internal jumper also sends current through pin 7 to reach the indicator lamp within the switch. The ground path for the internal indicator lamp exits pin 9 and passes through a wire splice and connector **X033** to reach the cab floor ground location #3. This causes the internal indicator lamp to illuminate.
Current travels from pin 3 to reach a wire splice. The wire splice sends current to two different paths:
The first path sends current through connectors **X033** and **X015** to reach pin J1-15 of CCM-2. This informs the network that the hazard switch has been activated.

When the hazard switch is activated, the following work lights are disabled:

- LH Cab Inner Work Light (E-17) will only operate in "Low Beam" mode.
- RH Cab Inner Work Light (E-18) will only operate in "Low Beam" mode.
- LH Lower Work Light (E-23)
- RH Lower Work Light (E-24)
- Unload Tube Light (E-29)
- LH Rear Work Light (E-27)
- RH Rear Work Light (E-28)
- LH HID Field Lights (E-60)
- RH HID Field Lights (E-61)

The second path sends current to pin 2 of the Flasher Module (A-05). The Flasher Module energizes and sends pulsing current from pins 3 and 4.

PIN 3 of the Flasher Module

- Pulsing current exits pin 3 and reaches a wire splice. The wire splice directs current to two paths:
  The first path sends pulsing current through connector **X257** to reach pin 7 of the Turn Indicator (Left) (E-09) found on the steering column. The ground path exits pin 9 and travels through a wire splice and connector **X033** to reach the cab floor ground location #3. This causes the left light within the turn indicator to flash on and off.
  The second path sends pulsing current through connectors **X033** and **X005** to reach a wire splice. **Wiring harness - Electrical schematic frame 34 (A.30.A.88 - C.20.E.34)** The wire splice sends pulsing current to three different paths:
- **Wiring harness - Electrical schematic frame 33 (A.30.A.88 - C.20.E.33)** The first path (North American models only) sends pulsing current through connector **X008** and connector **X007** to reach connector **X032**. If a header is equipped, the header harness is used to send pulsing current through connector X303 to the LH Header Flashing Lamp (NA) (E-01). The ground path exits connector X303 and passes through a wire splice, connector **X032**, and connector **X071** to reach the front frame ground location #2. This causes the LH Header Flashing Lamp (NA) (E-01) to flash on and off.
- **Wiring harness - Electrical schematic frame 34 (A.30.A.88 - C.20.E.34)** The second path sends pulsing current through connector **X160** to a wire splice. The wire splice sends pulsing current to the LH Front Hazard Lamp (E-03) (All Markets) and the LH Flashing Lamp (E-52) (European Models Only). The ground path for the lights travels through a wire splice and connector **X160** to reach the front frame ground location

Bush and seat interference in block

0.123 - 0.183 mm	**0.0048 - 0.0072 in**

Coupling between bushings and support journals of the camshaft (assembly clearance)

0.050 - 0.135 mm	**0.0020 - 0.0053 in**

Cam lift

Intake	**9.30 mm**	**0.3661 in**
Exhaust	**9.45 mm**	**0.3720 in**
Injector-pump	**11.21 mm**	**0.4413 in**

Rocker arm support shaft diameter

41.984 - 42.000 mm	**1.6529 - 1.6535 in**

Seat diameter for rocker arm support shaft bushings in rocker arms

Intake valves	**41.984 - 42.000 mm**	**1.6529 - 1.6535 in**
Exhaust valves	**41.984 - 42.000 mm**	**1.6529 - 1.6535 in**
Injectors-pump	**41.984 - 42.000 mm**	**1.6529 - 1.6535 in**

Bushing external diameter for rocker arms

Intake valves	**45.090 - 45.130 mm**	**1.7752 - 1.7768 in**
Exhaust valves	**59.100 - 59.140 mm**	**2.3268 - 2.3283 in**
Injectors-pump	**46.066 - 46.091 mm**	**1.8136 - 1.8146 in**

Bushing internal diameter for rocker arms with bushing fitted

Intake valves	**42.025 - 42.041 mm**	**1.6545 - 1.6552 in**
Exhaust valves	**56.030 - 56.049 mm**	**2.2059 - 2.2067 in**
Injectors-pump	**42.015 - 42.071 mm**	**1.6541 - 1.6563 in**

Clearance between bushings and rocker arm support shaft

Intake valves	**0.025 - 0.057 mm**	**0.0010 - 0.0022 in**
Exhaust valves	**0.025 - 0.057 mm**	**0.0010 - 0.0022 in**
Injectors-pump	**0.015 - 0.087 mm**	**0.0006 - 0.0034 in**

Coupling between bushings and seats in rocker arms

Intake valves	**0.074 - 0.130 mm**	**0.0029 - 0.0051 in**
Exhaust valves	**0.081 - 0.140 mm**	**0.0032 - 0.0055 in**
Injectors-pump	**0.050 - 0.091 mm**	**0.0020 - 0.0036 in**

Main Data of the Camshaft and Tolerances (Dimensions in mm)

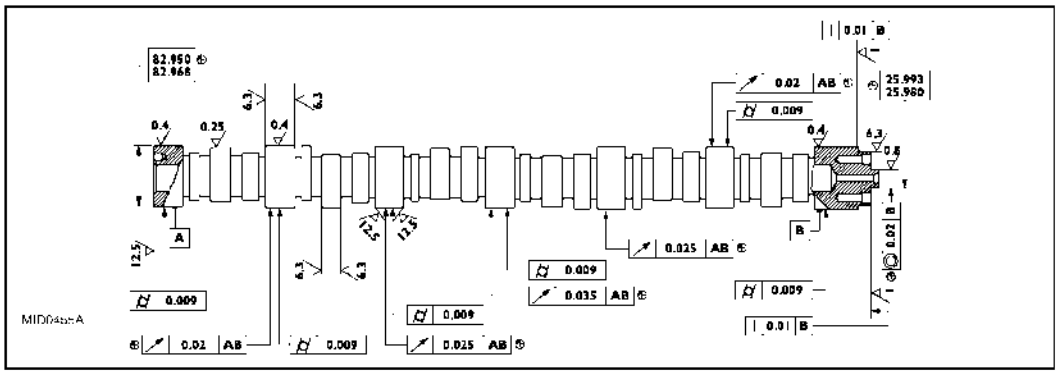

mid0455a 1

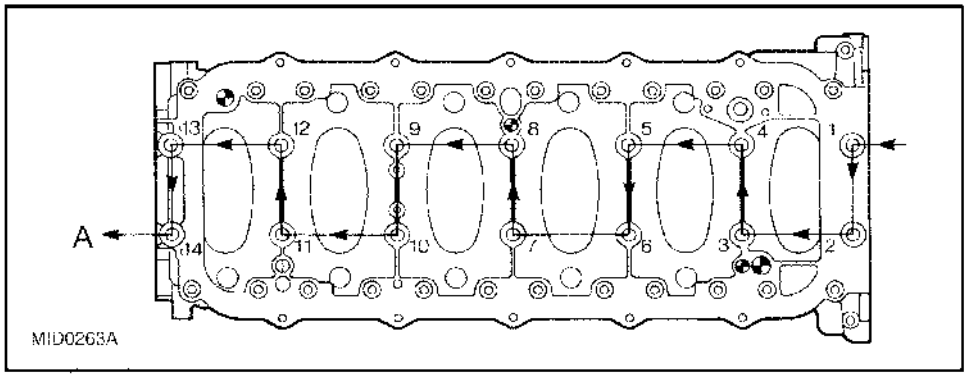

mid0263a 3

Internal screws - Fourth phase: angle closed

M17x2	45 deg

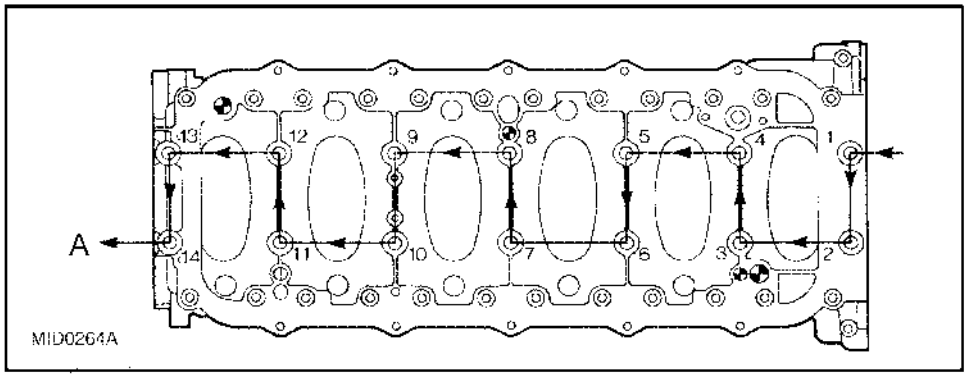

mid0264a 4

External screws - Fifth phase: angle closed

M17x1.75	60 deg

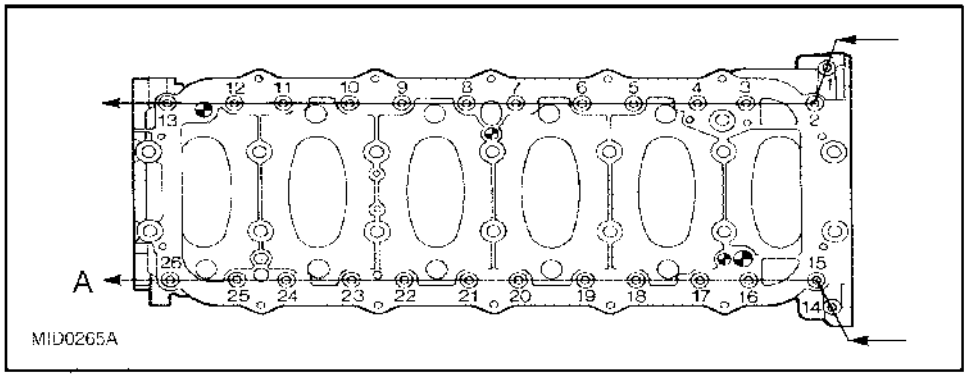

mid0265a 5

Screws securing gearbox to crankcase

M12x1.25	**56 - 70 Nm**	**41 - 51 lb ft**

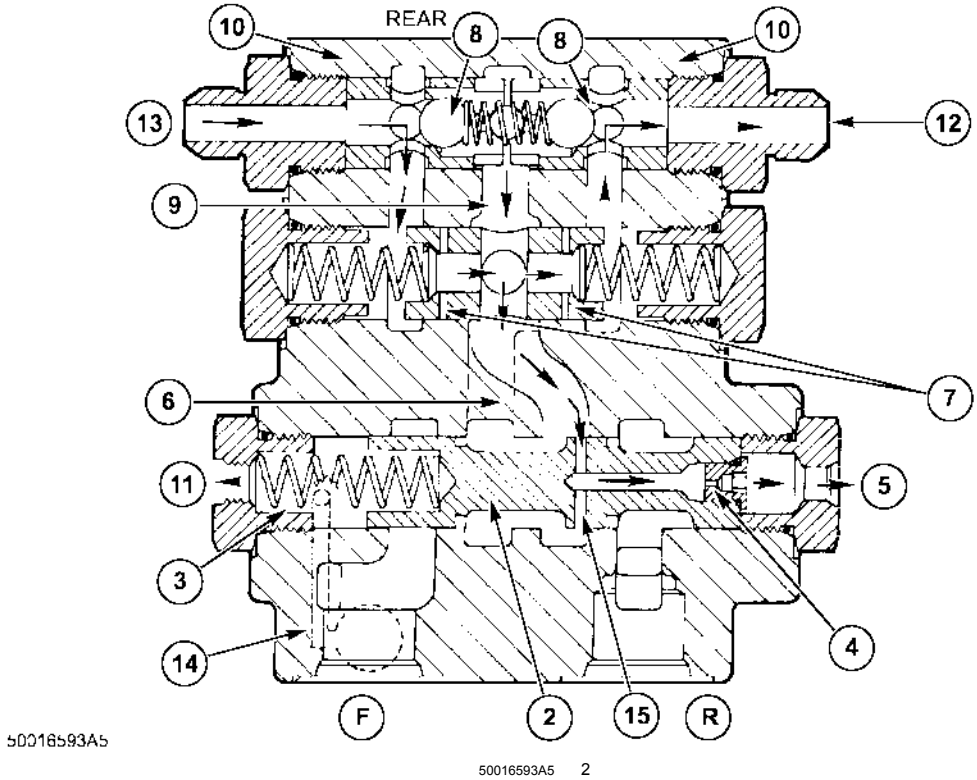

Cross Section of Control Valve - "Off" Position

•

The return spring **(3)**, Figure 2, and charge pressure directed from the low pressure spool, through port **(C)** of the solenoid valve, and through the drilled passage **(14)**, Figure 2, will move and keep the spool **(2)**, Figure 2, to the left side of the spool bore. This is the "disengaged" position for the spool and the forward and reverse high pressure ports are closed off.

The rear wheels of the combine will now "freewheel". As the wheels rotate, the wheel motor pistons are pushed back into their bores. The hydraulic fluid behind the pistons is directed back to the wheel motor supply/return ports **(12, 13)**, Figure 2, of the valve. From there, the fluid from the right wheel motor flows through the flow dividers **(7)** and the right check valve **(8)** and center passage **(9)**. Hydraulic fluid then flows to the left side wheel motor reverse supply/return port **(12)** and to the selector spool **(2)**. Hydraulic fluid that exits the valve at the reverse supply/return port **(12)** and from the left wheel motor is directed to the drain valve by a "tee" connection at the reverse supply/return port **(12)** Hydraulic fluid flows from the "tee" to the drain valve through an external tube. A drilled passage **(15)** in the selector spool allows hydraulic fluid that does not flow out of the valve through the reverse supply/return port **(12)** to flow through the spool **(2)** through the case drain orifice **(4)** and out of the valve at the pressure to engage port **(5)**. From there, fluid is directed back to the solenoid valve via an external tube where the fluid drains back to tank.

When the Powered Rear Axle is off, charge pressure that is directed from the solenoid valve to the selector spool is also directed to the drain valve out of the pressure to disengage port **(11)**, through an external tube. This pressure shifts the spool in the drain valve that allows hydraulic fluid from the wheel motors (from the "tee" at the reverse supply/return port **(12)**) to flow through the drain valve and out. From the drain valve, hydraulic fluid is directed back to tank through an external tube that connects to the valve drain.

VALVE OPERATION "INTERMEDIATE" POSITION
(Reference Figures 3, 4, and 5)

NOTE: *Reference to directions are as if viewing the valve from the rear, facing the front of the combine.*

Transmission command - Sectional view (C.20.B.05 - C.10.A.30)

AFX8010

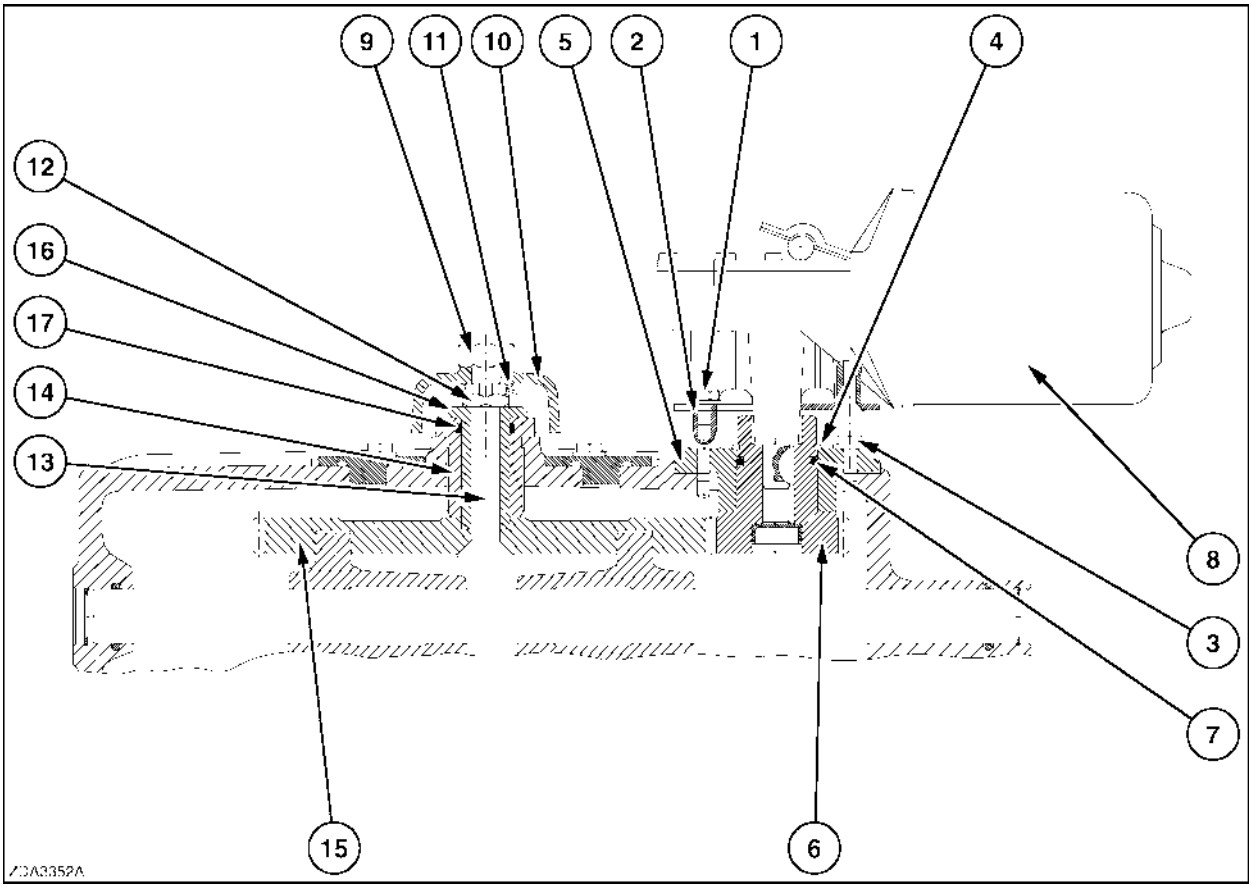

3352a 1

1.Bolt	10.Indicator Plate
2.Special Bolt	11.Cotter Pin
3.Bolt	12.Nut
4.Friction Ring and Circlip	13.Bolt
5.Housing	14.Shifting Disc Housing
6.Shifting Drive Gear	15.Shifting Disc
7.O-Ring	16.Bushing
8.Electric Motor	17.O-Ring
9.Nut	.

Shaft - Remove (C.42.B.43 - F.10.A.10)

AFX8010

1. Remove the two bolts in the yoke at the end of the shaft **(1)**. Remove the four cap screws with the 12 point head **(2)**. Use a 10 mm 12 point socket or wrench. Once the bolts are removed, separate the cross and yoke at the drive shaft end. Now remove the remaining yoke end from the gearbox shaft.

NOTE: *It may be necessary to hold the shaft from turning.*

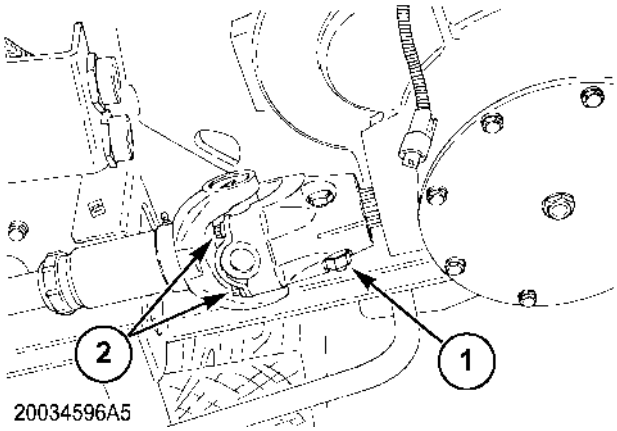

20034596A5 1

2. On the bottom gearbox, remove the two bolts on the yoke end **(1)**.

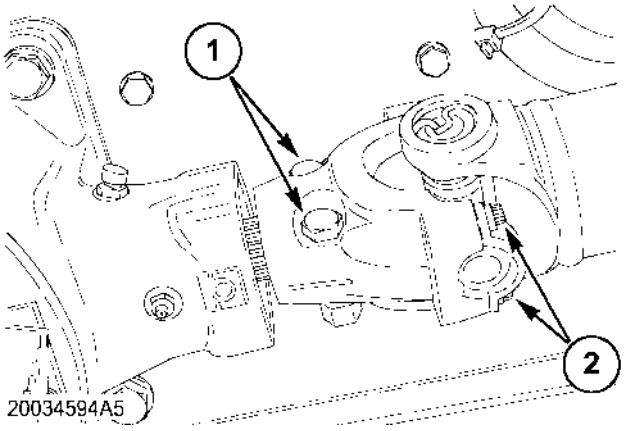

20034594A5 2

3. Once the two bolts are removed, the driveshaft can now be slid off the lower gearbox shaft and removed from the feeder.

NOTE: *Remember the orientation of the drive shaft coming off the feeder, it must be installed the same way it came off.*

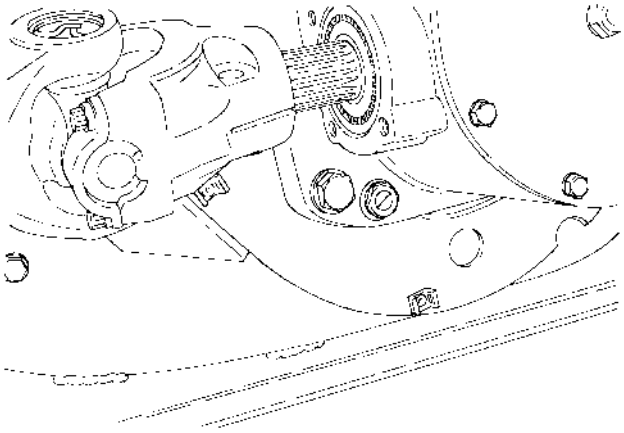

20034597 3

Control valve Speed control valve - Unidentified failure (K.40.C.14.10 - G.30.B.46)

AFX8010

E0330-11 - Rotor CVT Pump Valve

Cause:
The Rotor Pump Swash Minus (L-41) and/or Rotor Pump Swash Plus (L-40) circuits are shorted to ground.

Possible failure modes:

1. Supply wiring damaged.
2. Solenoid failed.
3. Controller internal failure (internal regulator failure).

Solution:

1. Key switch ON, combine engine running. Enter the Universal Display Plus "DIAG" screen. Select the "THRESHING" or "ROTOR" sort menu, and select "CVT PMP VLV" to check the current. Engage the separator switch S-30, and use the rotor speed switch S-17 to increase and decrease rotor speed while monitoring the current.

   The current should vary gradually between **0 - 90 mA** (**0 - 4.4 volts**), depending on rotor speed.
   If the current spikes to a maximum of **100 mA**(>**4.7 volts**), and then abruptly drops to zero, there is a short to ground on the output lead to the control valve.

   A. If the current spikes to maximum , and then abruptly drops to zero, continue with step **2**.

   B. If the voltage readings are within the proper ranges, continue with step **10**.
2. Turn the key switch to the "OFF" position. Disconnect the rotor pump swash solenoids connector **X408**. Use a multimeter to check the resistance of the rotor pump swash solenoid coils between terminals D & C, and then between terminals A & B. The proper resistance range for the solenoid coils is **16k - 20k ohms**.

   A. If either of the solenoid coils is out of specification, replace the solenoid.

   B. If the solenoid coils are within specifications, continue with step **3**.
3. Use a multimeter to check for continuity between the rotor pump swash minus solenoid coil terminals D or C and chassis ground. There should not be continuity to ground.

   A. If there is continuity to ground, replace the solenoid.

   B. If there is no continuity to ground, continue with step **4**.
4. Use a multimeter to check for continuity between the harness end of connector **X408** pin C and chassis ground. There should not be continuity to ground.

   A. If there is continuity to ground, continue with step **5**.

   B. If there is no continuity to ground, continue with step **7**.
5. Disconnect connector **X011**. Use a multimeter to check for continuity between the main frame (MF) harness end of connector **X011** pin 1 and chassis ground. There should not be continuity to ground.

   A. If there is no continuity to ground, there is a short to ground in the gearbox (GB) harness between connector **X011** and connector **X402** wire 1047 white.Locate the short and repair.

   B. If there is continuity to ground, continue with step **6**.
6. Disconnect connector **X034A**. Use a multimeter to check for continuity between the front frame (FF) harness end of connector **X034A** pin 3 and chassis ground. There should not be continuity to ground.

Control valve Clutch control valve - Unidentified failure (K.40.C.14.20 - G.30.B.46)

AFX8010

E0308-11 - Rotor ETR Clutch Valve

Cause:
The Rotor ETR Clutch Valve (L-45) circuit is open, or shorted to ground.

Possible failure modes:

1. Supply wiring damaged.
2. Bad solenoid.
3. Controller internal failure (internal regulator failure).

Solution:

1. Start the combine engine. Enter the Universal Display Plus "DIAG" screen. Select the "THRESHING" or "ROTOR" sort menu, and select "ETR CTCH VLV" to monitor the current flow. Use the "COMMAND" and "ENGAGE" functions to power the circuit at 100% output.

   The proper current is approximately **1.0 - 1.5 amps**.

   A. If the current reading goes to maximum, and then back to zero, the circuit is shorted to ground and the software has shut off the output to protect the module and wiring. Continue with Step **2**.

   B. If the reading is **0 amps**, the circuit is open. Continue with Step **5**.

   C. If the reading is within the proper range, the circuit is working properly. Continue with Step **11**.

2. Disconnect the Rotor ETR clutch connector **X410**. Use a multimeter to check between connector **X410** pin A (valve side) and chassis ground.

   A. If there is continuity, the Rotor ETR clutch solenoid is shorted to ground. Replace the solenoid.

   B. If there is no continuity, continue with Step **3**.

3. Use a multimeter to check for continuity between connector **X410** pin A (harness side) and chassis ground. Flex the gearbox (GB) harness between the clutch valve and connector **X011** while making this check.

   A. If there is continuity to ground, continue with Step **4**.

   B. If there is no continuity to ground, continue with step **9**.

4. Disconnect connector **X011**. Use a multimeter to check for continuity between connector **X011** pin 4 and chassis ground. Flex the main frame (MF) harness between the connector **X011** and connector **X013** while making this check.

   A. If there is no continuity to ground, the short to ground is in the gearbox (GB) harness between connector **X011** and connector **X410** wire 1048 white. Locate the short and repair.

   B. If there is continuity to ground, continue with step **6**.

5. Disconnect connector **X034A**. Use a multimeter to check for continuity between connector **X034A** pin 5 and chassis ground. Flex the main frame (MF) harness between the connector **X011** and connector **X013** while making this check.

   A. If there is no continuity to ground, the short to ground is in the main frame (MF) harness between connector **X011** and connector **X034A** wire 1048 white. Locate the short and repair.

   B. If there is continuity to ground, the short to ground is in the expansion (EX) harness between connector **X034A** and connector **X013** pin J2-30 wire 1048 white. Locate the short and repair.

A. If **12 volts** is found, continue with Step **12**.

B. If **12 volts** is not found, continue with Step **13**.

14. Key switch ON. Operate the concave motor using the Universal Display Plus "DIAG" screen controls. Use a multimeter to measure the voltage between connector **X190** pin 1 and chassis ground.

A. If **12 volts** is not found, continue with step **15**.

B. If **12 volts** is found, replace the concave motor.

15. Key switch ON. Operate the concave motor using the Universal Display Plus "DIAG" screen controls. Use a multimeter to measure the voltage between connector **X456** pin 1 and chassis ground.

A. If **12 volts** is found, there is an open circuit in the concave extension (CC) harness between connector **X190** and connector **X456** wire 694 gray. Locate the open and repair.

B. If **12 volts** is not found, there is an open circuit in the main frame (MF) harness between connector **X456** and connector **X019** J2-1 wires 694 gray or 522 gray. Locate the open and repair.

16. Disconnect connector **X456**. Key switch ON. Operate the concave motor using the Universal Display Plus "DIAG" screen controls. Use a multimeter to measure the voltage between connector **X456** pin 2 and chassis ground.

A. If **12 volts** is found, there is an open circuit in the concave extension (CC) harness between connector **X456** and connector **X190** wire 695 white. Locate the open and repair.

B. If **12 volts** is not read, continue with step **17**.

17. Disconnect connector **X004**. Key switch ON. Operate the concave motor using the Universal Display Plus "DIAG" screen controls. Use a multimeter to measure the voltage between connector **X004** pin 30 and chassis ground.

A. If **12 volts** is found, there is an open circuit in the main frame (MF) harness between connector **X004** and connector **X456** wire 695 white. Locate the open and repair.

B. If **12 volts** is not read, there is an open circuit in the cab main (CM) harness between connector **X004** and relay base terminal 4 on relay K16, wire 695 white. Locate the open and repair.

18. Disconnect connector **X190** at the concave clearance motor. Use a multimeter to check for continuity between concave motor connector **X190**pin 1 or 2 and chassis ground. There should not be any continuity to ground..

A. If there is continuity to ground, replace concave motor.

B. If there is no continuity to ground, return to step **1** and repeat the concave motor circuit test.

19. Manually operate the grain tank covers motor using the "DIAG" screen controls, while having an observer inspect the grain tank covers linkage for binding.

A. The grain tank covers motor is bound up. See the appropriate repair manual chapter for repair.

20. The covers operates in one direction only. Fault codes indicate a short to ground. Disconnect the covers motor connector **X289**. Measure the resistance on connector **X289** between pin A and pin B. The proper resistance range for the coil is **1.0 - 5.0 ohms**.

A. If out of specification, replace covers motor.

B. If the motor coil resistance is within specification, continue with Step **17**.

21. Measure the resistance on connector **X289** between pin A and chassis ground. Flex the grain tank jumper and main frame (MF) harnesses while making this check.

A. If no continuity to ground is found, erase the fault code and continue operation.

B. If there is continuity to ground, continue with Step **18**.

22. Disconnect connector **X195**. Use a multimeter to check for continuity between connector **X195** pin 4 and chassis ground.

5. Subassemble the clutch piston **(1)** by inserting the smaller o-ring and small seal **(2)** into the groove in the ID of the piston. Install the larger o-ring and larger seal **(3)** into the groove on the piston OD.

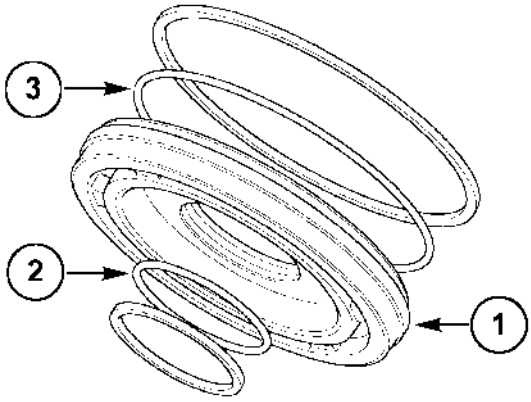

10035840A5 5

6. Size the inner seal and outer seal on the clutch piston **(2)** , lube both seals. Press the piston onto the clutch shaft with the tool installed **(1)** until the piston is fully seated into the clutch housing **(3)**.

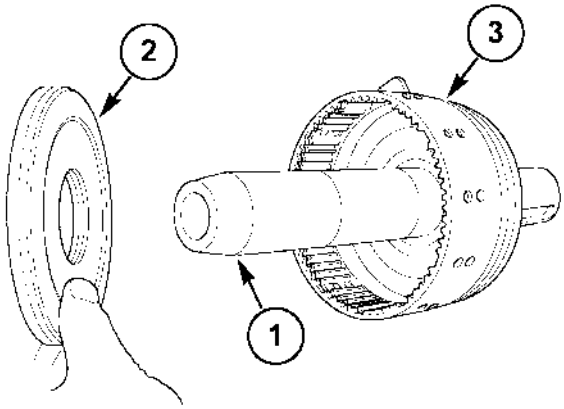

10041891A5 6

7. Place the return spring **(3)** over the shaft and into the piston. Drop the spring retainer **(4)** (lip towards spring) and retain on shaft with external snap ring **(5)** (narrow side up). This will require pressure to be applied to the spring.

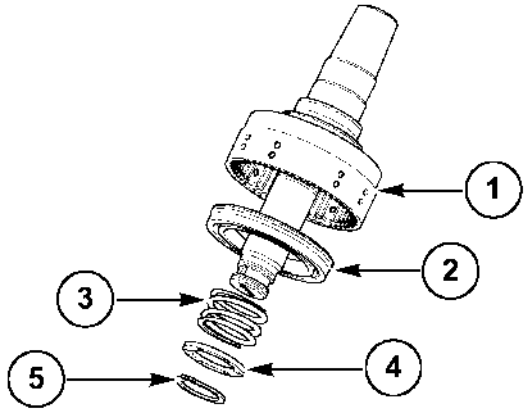

10035841A5 7

8. Assemble the clutch pack using four each of the following; separator plate **(3)** , friction plate **(2)** and in this order until all are used. After all separator plates and friction plates are in place, seated and aligned place the clutch backing plate **(4)** on stack and retain with backing plate retaining ring **(5)** (narrow side up). Be sure retaining ring **(5)** is fully seated into the groove.

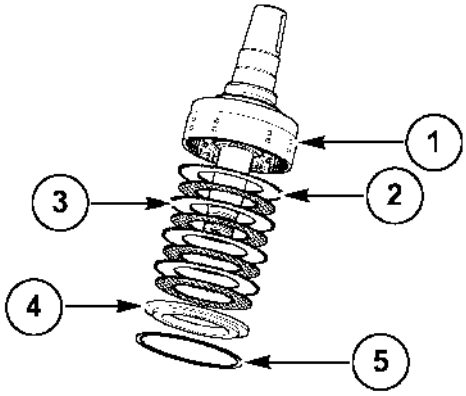

10035842A5 8