Workshop manual
DISCOVERY

This manual covers vehicles from 1995 model year


01
04
05
07
09


10


12


17
19


26


30


33


37
41
44


47
51
54


57


60
64
74


70

75
76


80
82

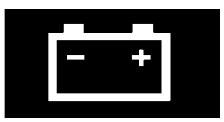
84
86

Published by Rover Technical Communication

Publication Part No. LRL 0079 ENG (2nd Edition)

LAND ROVER

DYNAMOMETER TESTING - VEHICLES WITH ANTI-LOCK BRAKES (ABS)

WARNING: Do not attempt to test ABS function on a dynamometer

Four wheel dynamometers

NOTE: Before testing a vehicle on a four wheel dynamometer disconnect the valve relay. ***See Electrical Trouble Shooting Manual.***
The ABS function will not work, the ABS warning light will illuminate. Normal braking will be available.

Provided that front and rear rollers are rotating at identical speeds and that normal workshop safety standards are applied, there is no speed restriction during testing except any that may apply to the tyres.

Two wheel dynamometers

IMPORTANT: Use a four wheel dynamometer for brake testing if possible.

NOTE: ABS will not function on a two wheel dynamometer. The ABS light will illuminate during testing. Normal braking will be available.

If brake testing on a single rig is necessary it must be carried out with propeller shaft to the rear axle removed, AND neutral selected in BOTH main and transfer boxes.

If checking engine performance, the transfer box must be in high range and drive shaft to stationary axle removed.

TOWING

CAUTION: The vehicle has permanent four-wheel drive. The following towing instructions must be adhered to:

Towing the vehicle on all four wheels with driver operating steering and brakes.

1. Turn ignition key turn to position ’1’ to release steering lock.
2. Select neutral in main gearbox and transfer gearbox.

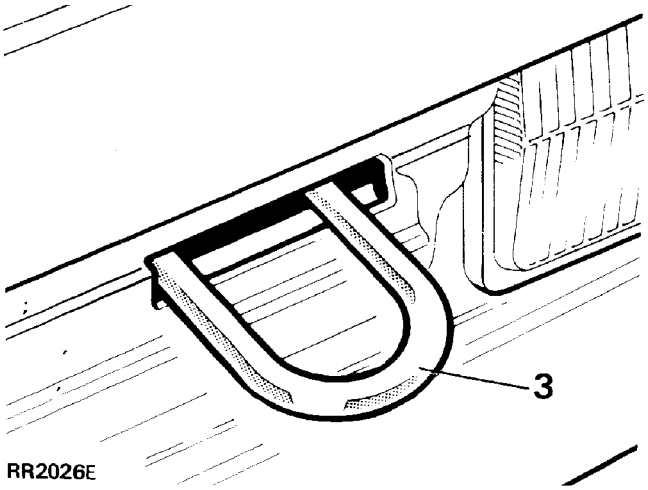

3. Secure tow rope, chain or cable to towing eye.
4. Release the parking brake.

CAUTION: The brake servo and power assisted steering system will not be functional without the engine running. Greater pedal pressure will be required to apply the brakes, the steering system will require greater effort to turn the front road wheels.
The vehicle tow connection should be used only in normal road conditions, ’snatch’ recovery should be avoided.

Suspended tow by breakdown vehicle

CAUTION: To prevent vehicle damage, front or rear propeller shaft MUST BE removed, dependent upon which axle is being trailed.

1. Mark propeller shaft drive flanges at transfer gearbox and axles with identification lines to enable the propeller shaft to be refitted in its original position.
2. Remove the propeller shaft fixings, remove the shaft from the vehicle.
3. If the front axle is to be trailed turn ignition key to position ’1’ to release steering lock.

CAUTION: The steering wheel and/or linkage must be secured in a straight ahead position. DO NOT use the steering lock mechanism for this purpose.

European vehicle identification number (VIN)

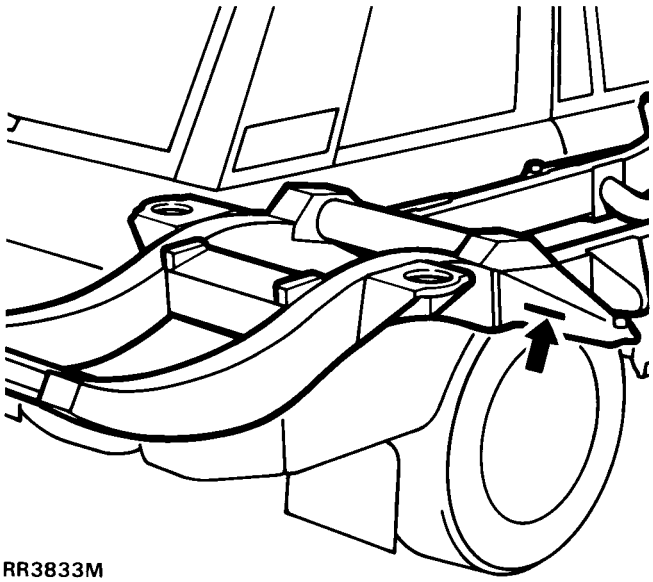

RR3833M

Stamped on the right hand side chassis forward of rear wheel.

Federal (USA) vehicle identification number

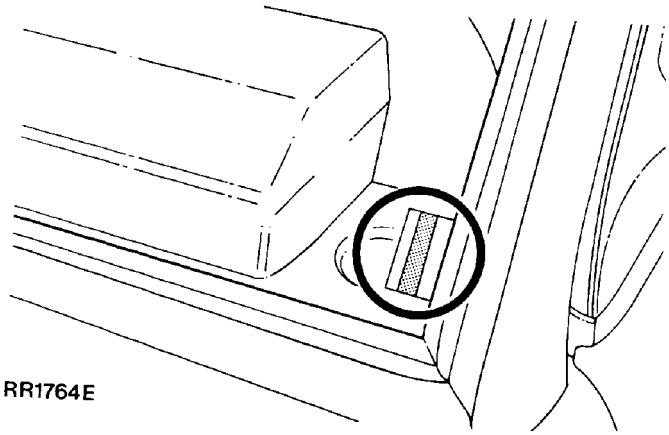

RR1764E

Stamped on a plate rivetted to the upper left hand 'A' - post, visible through the front screen of the vehicle.

Vehicle identification number (VIN)

An adhesive label containing the Vehicle Identification Number, date of manufacture and gross axle weight ratings is fixed to the lock face of the front left hand door. The information includes wheel and tyre sizes and tyre pressures at gross axle weight ratings.

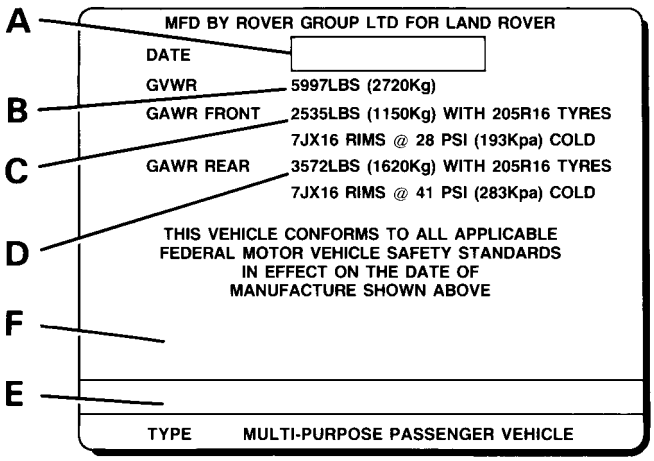

RR2944E

Key to vehicle identification label

A. Month and year of manufacture
B. Gross vehicle weight rating
C. Gross axle weight rating for front axle
D. Gross axle weight rating for rear axle
E. Vehicle identification number (17 digits)
F. Vehicle identification number - bar code

BOOST PRESSURE SENSOR

Service repair no - 18.30.63

Remove

1. Disconnect battery negative lead.

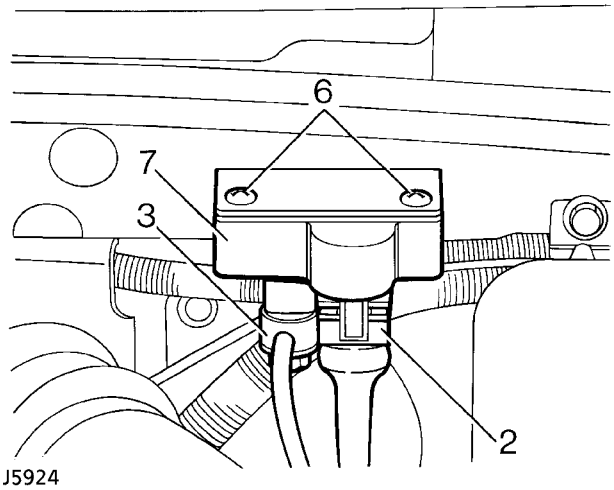

J5924

2. Disconnect sensor multi-plug.
3. Disconnect pressure tube union.
4. Retrieve and discard union copper washers.
5. Place pressure tube aside.
6. Remove sensor to mounting bracket bolts.
7. Remove sensor.

Refit

8. Renew all copper washers.
9. Reverse removal procedure.

INJECTION TIMING SENSOR

Service repair no - 18.30.64

Remove

1. Disconnect battery negative lead.

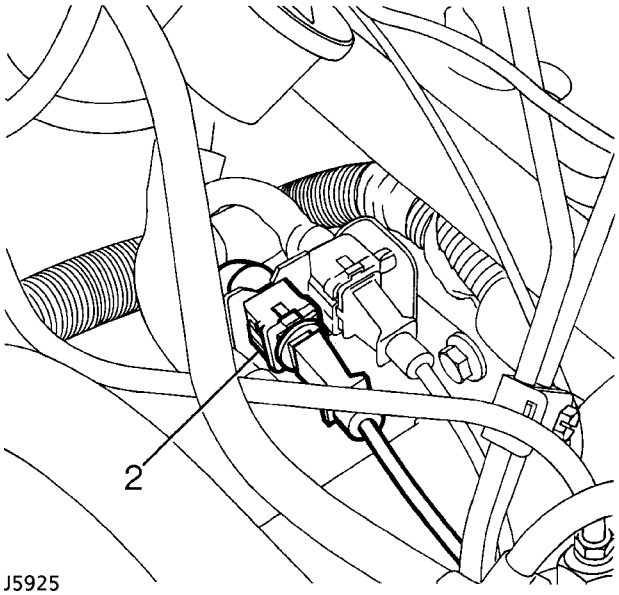

J5925

2. Disconnect sensor multi-plug.
3. Disconnect spill return pipe to injector.
4. Disconnect injector union.

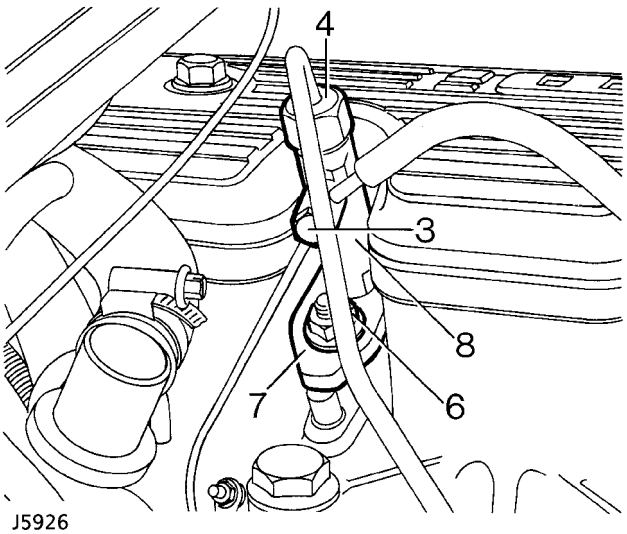

J5926

5. Remove copper washers.
6. Remove injector clamp fixing.
7. Remove clamp.
8. Remove injector.
9. Remove injector copper washers.

Refit

10. Renew all copper washers.
11. Reverse removal procedure.
12. Check for leaks when running.

BRAKE PEDAL SWITCH

Service repair no - 18.30.66

Remove

1. Disconnect battery negative lead.

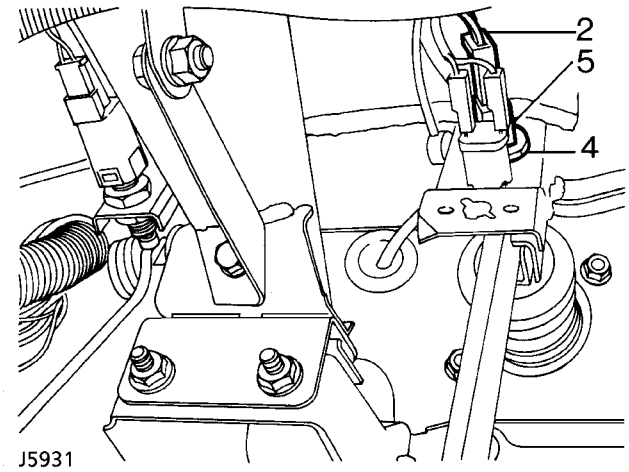

2. Disconnect switch wiring Lucars.
3. Loosen rear locknut.
4. Remove front locknut.
5. Remove switch from mounting bracket.

Refit

6. Reverse removal procedure.

COOLANT TEMPERATURE SENSOR

Service repair no - 18.30.68

Remove

1. Disconnect battery negative lead.

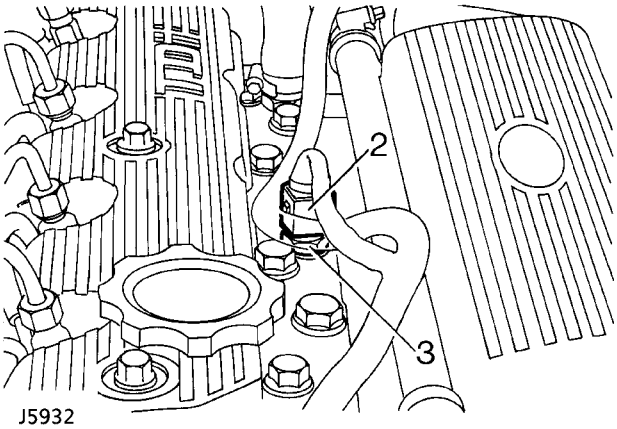

2. Disconnect sensor multi-plug.
3. Remove sensor.
4. Clean off water spillage from sensor area.

Refit

5. Fit a new copper washer.
6. Fit sensor and tighten securely.
7. Refill cooling system.
8. Run engine, check for water leaks around sensor.

BODY MOUNTED COMPONENTS

1. Engine control module (ECM).
2. Main relay and fuel pump relay.
3. Inertia switch.
4. Ignition coil.
5. Charcoal canister.
6. Purge control valve.

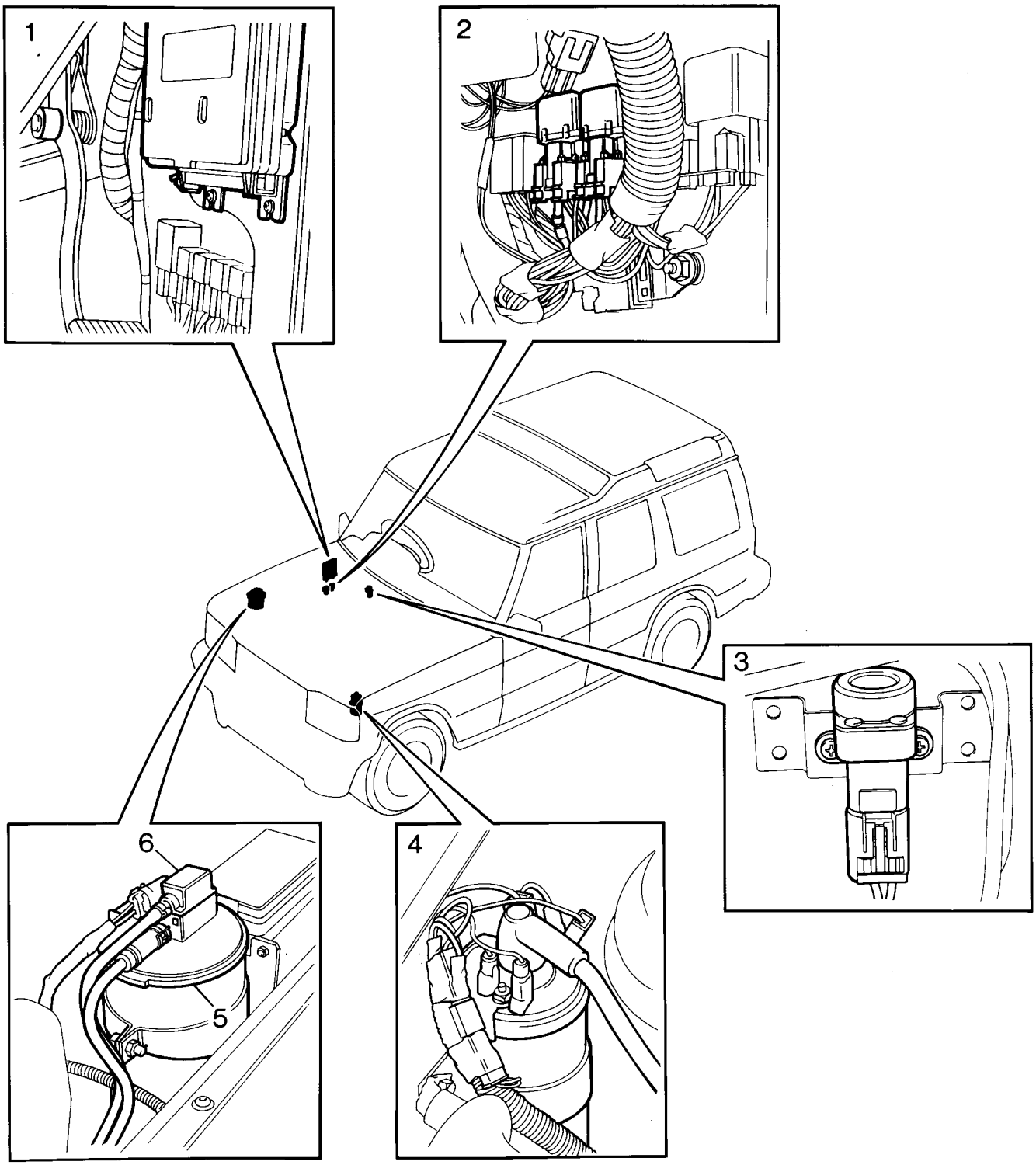

COOLANT TEMPERATURE SENSOR

Service repair no - 18.30.10

Remove

1. Position drain tin below coolant pump hose.
2. Disconnect sensor multiplug.
3. Release harness clip and harness.
4. Remove sensor.

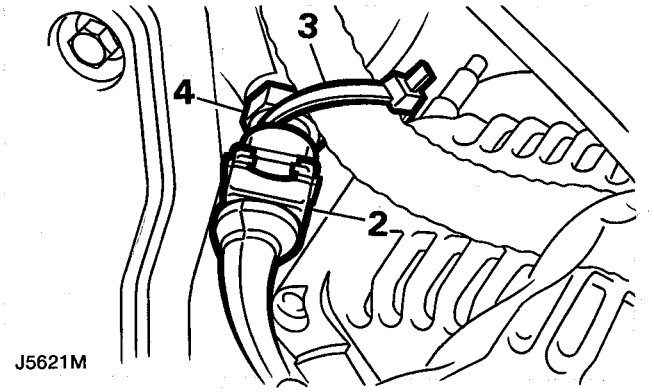

Refit

5. Clean sensor.
6. Fit sensor and tighten to the correct torque.
7. Position harness and secure with clip.
8. Connect multiplug.
9. Top-up cooling system.

CRANKSHAFT SENSOR

Service repair no - 18.30.12

Remove

1. Position vehicle on ramp [hoist].
2. Disconnect multiplug from crankshaft sensor flylead.
3. Remove screw, release lead from bracket.

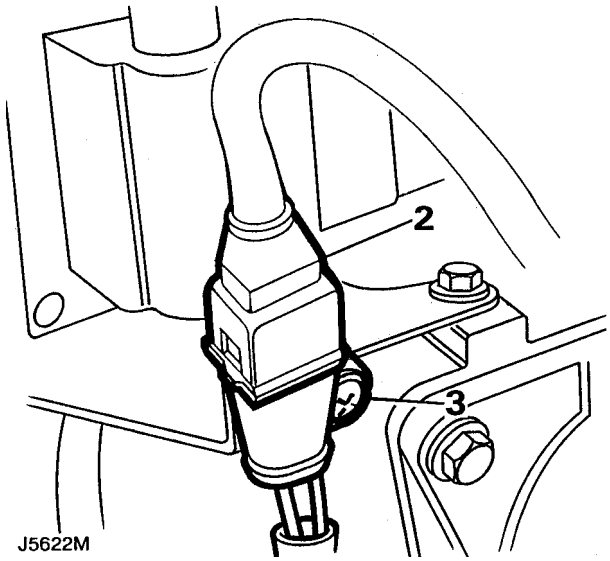

4. Raise ramp [hoist].
5. Remove 2 bolts securing crankshaft sensor.
6. Remove crankshaft sensor.

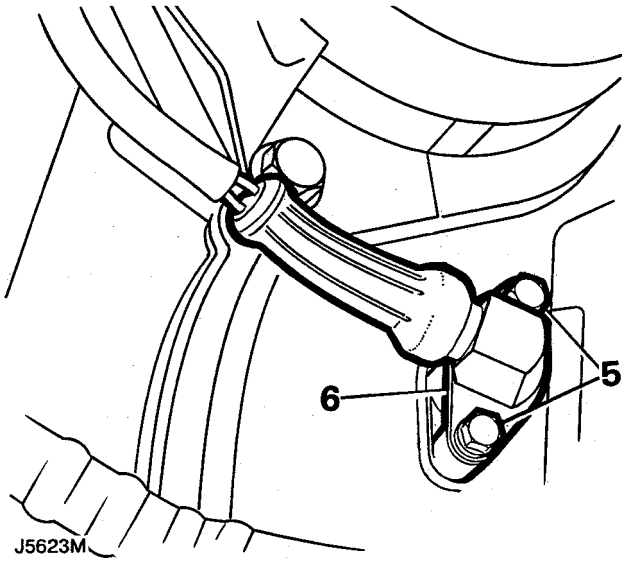

Refit

7. Clean crankshaft sensor and mating surface of backplate.
8. Fit crankshaft sensor, fit bolts. Tighten to ***7 Nm***
9. Lower vehicle.
10. Position lead to bracket, fit and tighten screw.
11. Connect multiplug

NOTE: If rotary coupler is to be re-used a piece of adhesive tape should be placed around the moulding in position A to prevent rotation. Failure to do this may result in damage to the wires inside the coupler.

6. Release clips securing rotary coupler to column stalk assembly.
7. Remove rotary coupler from column stalk assembly.

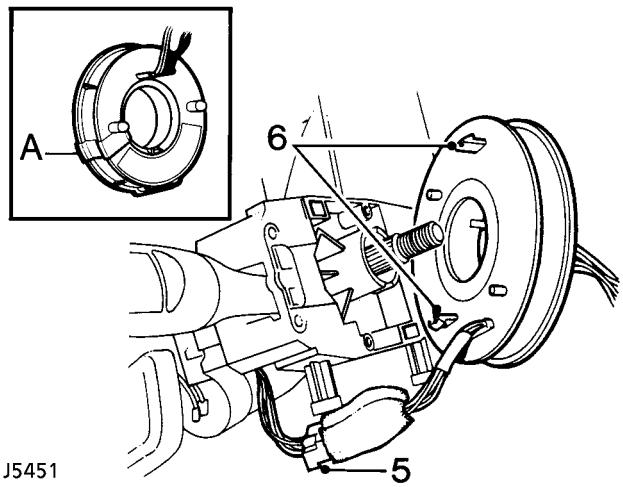

CAUTION: Ensure front wheels are in the straight ahead position before removal and refitting. Store in a plastic bag. DO NOT rotate mechanism whilst removed.

Refit

8. Reverse removal procedure. Ensuring that the column harnesses are not trapped by the column shroud.

NOTE: If original rotary coupler is to be fitted and there is evidence of tampering, it is imperative that the coupler is centralised. ***See SUPPLEMENTARY RESTRAINT SYSTEM, Repair, Rotary Coupler***

NOTE: If a new rotary coupler is to be fitted and the sealing tape is broken it MUST NOT be used. Ensure rotary coupler lugs are correctly engaged in the rear of the steering wheel.

ACTUATOR - V8i

Service repair no - 19.75.12

NOTE: The actuator is non serviceable, fit a new unit if failure or damage occurs.

Remove

1. Disconnect battery negative lead.
2. Disconnect vacuum hose from actuator.
3. Remove nut securing actuator to throttle bracket.
4. Remove actuator, and manoeuvre actuator operating link off throttle lever.
5. Withdraw actuator.

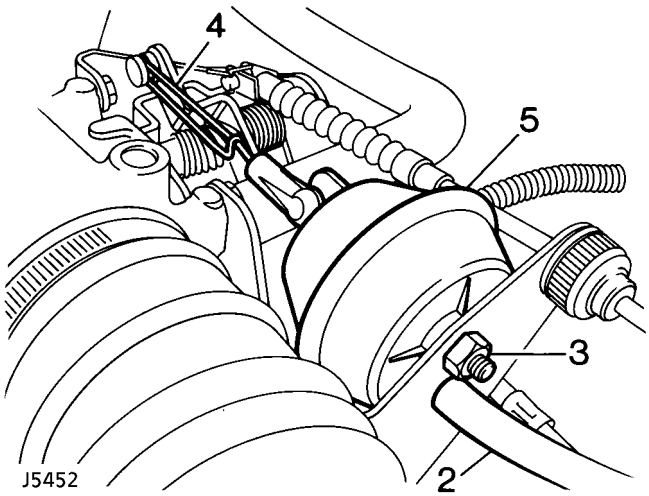

Refit

6. Inspect rubber diaphragm. Fit a new actuator assembly if diaphragm is damaged.
7. Reverse removal procedure. Fitting the hook uppermost.

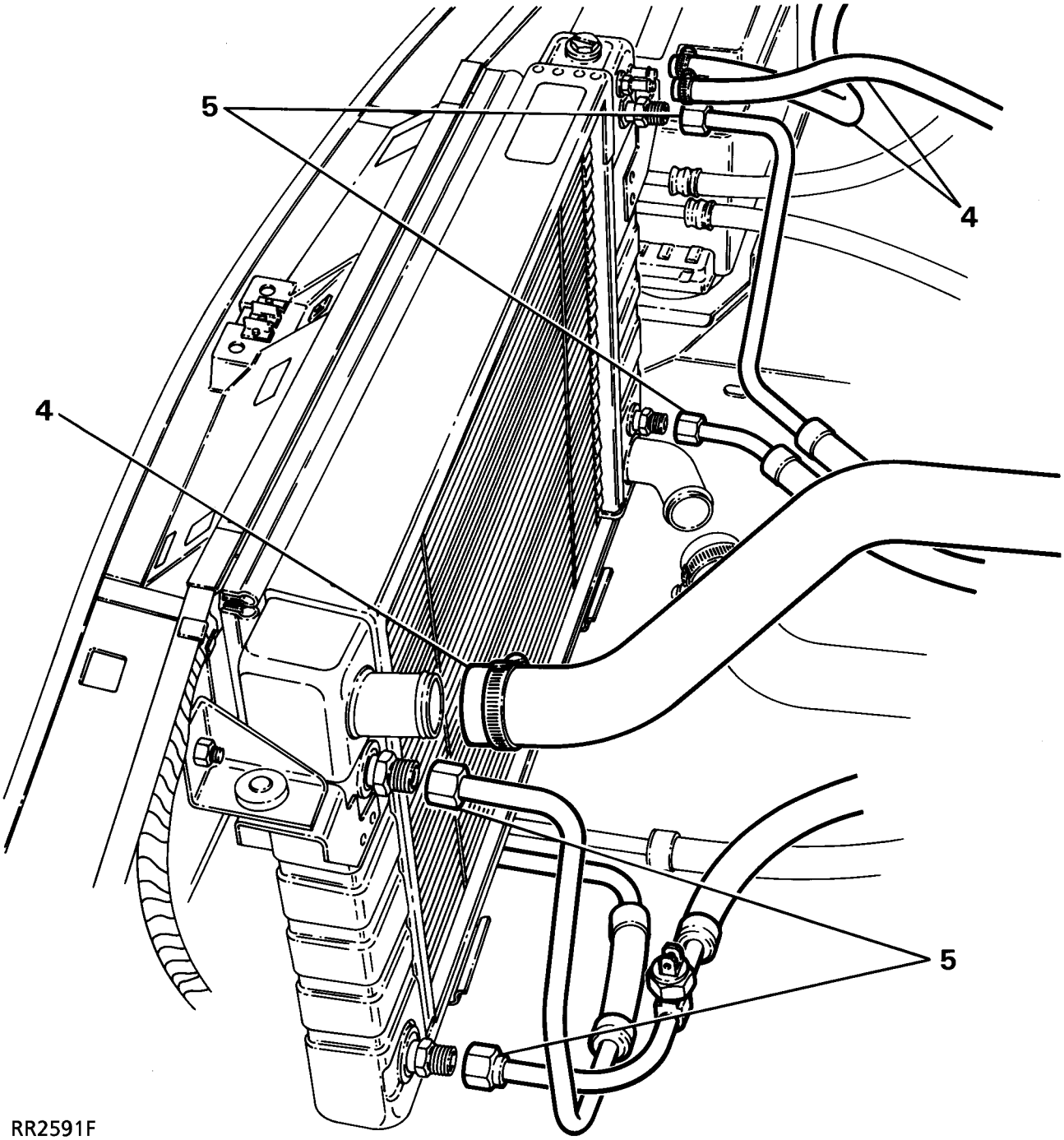
5
4
4
5
RR2591F

INLET MANIFOLD GASKET - Mpi

Service repair no - 30.15.08

Remove

1. Disconnect battery negative lead.
2. Position absorbent cloth around fuel pipe to fuel rail union. Unscrew union to relieve fuel pressure. Re-tighten union.

CAUTION: Plug connections.

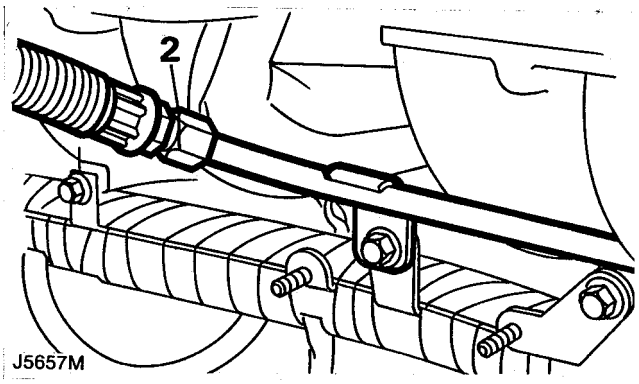

3. Release clip and remove air cleaner to throttle housing hose.
4. Disconnect stepper motor multiplug.
5. Disconnect throttle potentiometer multiplug.

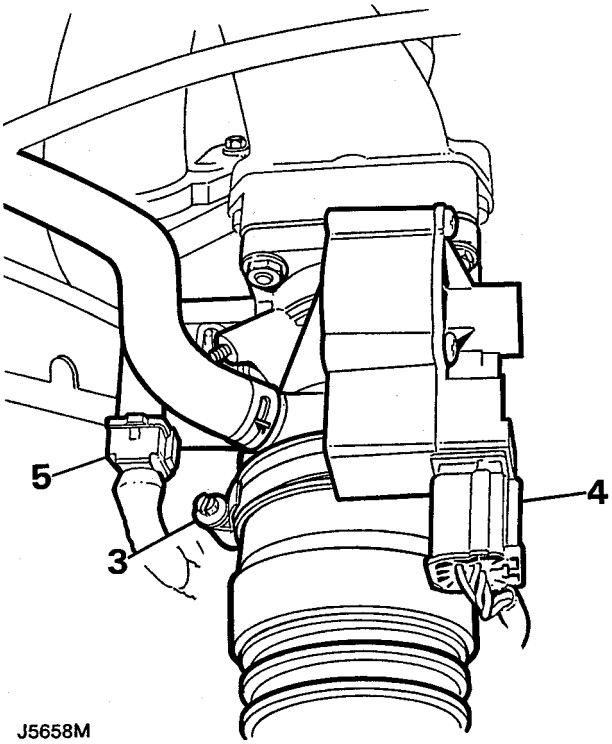

6. Release throttle cable from abutment bracket.
7. Release throttle cable from cam. Remove coolant bypass hose.

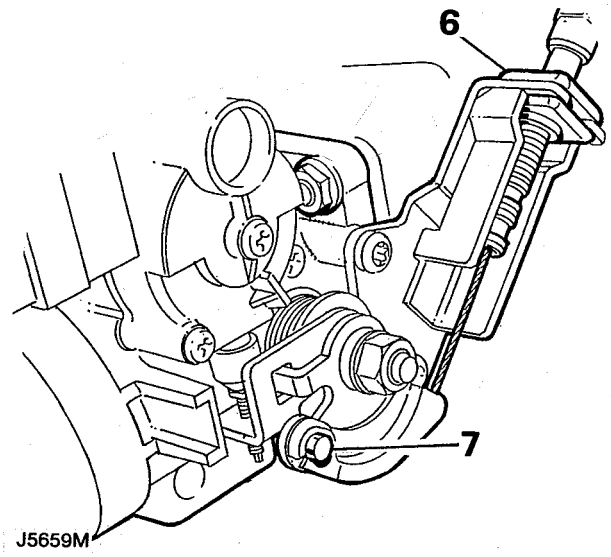

8. Disconnect fuel temperature sensor multiplug.
9. Release clip and disconnect brake servo hose from manifold.

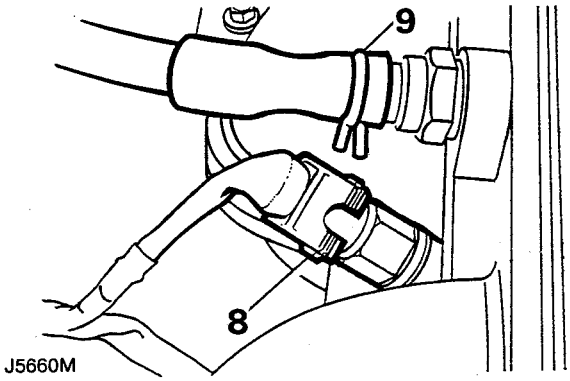

10. Release clip and disconnect breather hose from manifold.
11. Release 2 bolts securing cam cover brackets to manifold.

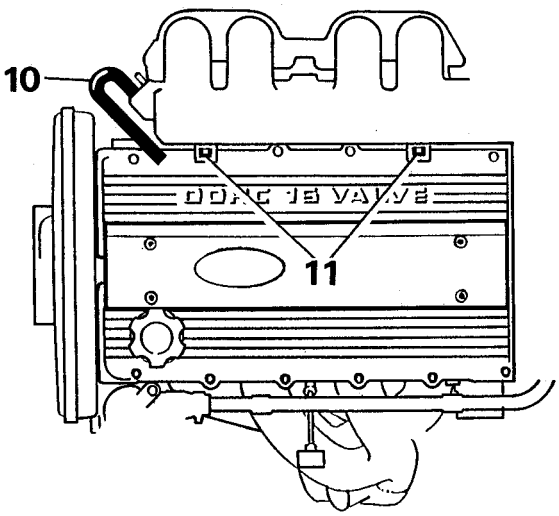

J5661M

12. Remove 3 bolts securing engine harness to manifold.

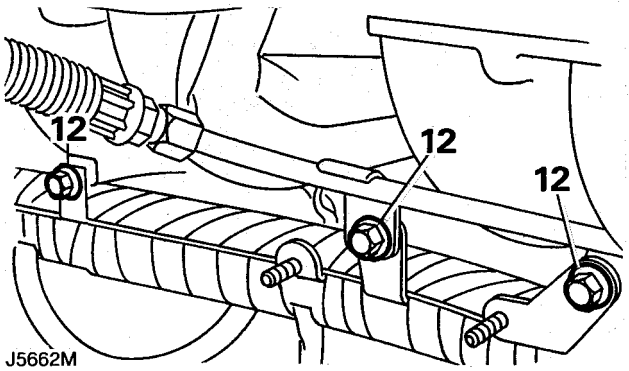

J5662M

13. Disconnect 3 vacuum hoses from manifold.

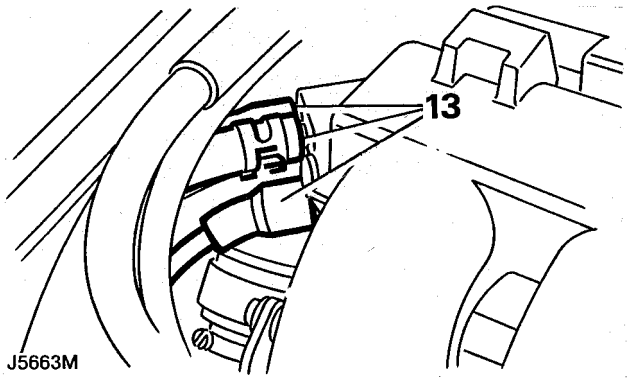

J5663M

14. Release clip and disconnect fuel hose from pressure regulator.

CAUTION: Plug the connections.

15. Disconnect intake air temperature sensor multiplug.
16. Disconnect fuel injector harness multiplug.

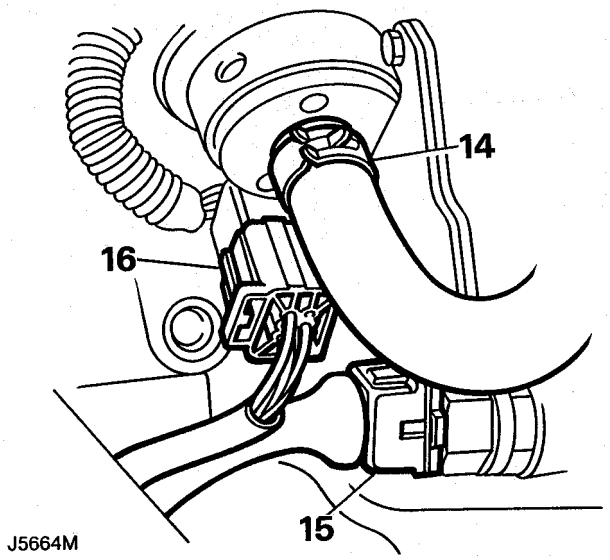

J5664M

17. Remove 2 nuts and 7 bolts securing manifold to cylinder head
18. Remove manifold assembly and collect gaskets.

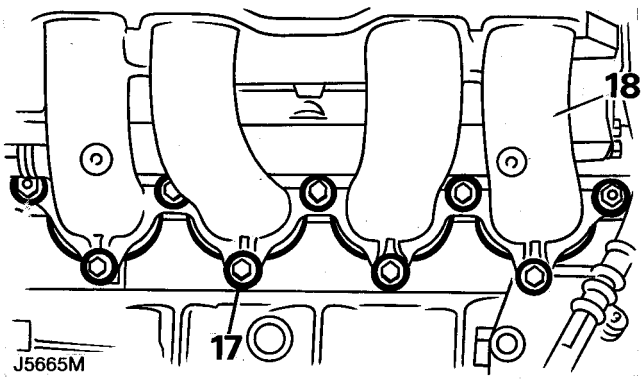

J5665M

DESCRIPTION

The clutch unit fitted with the manual transmission, comprises a single dry plate friction disc and diaphragm spring clutch unit, secured to the engine flywheel.

OPERATION

The unit is operated hydraulically by the clutch master cylinder 12 and a slave cylinder 13 attached to the transmission bell housing.

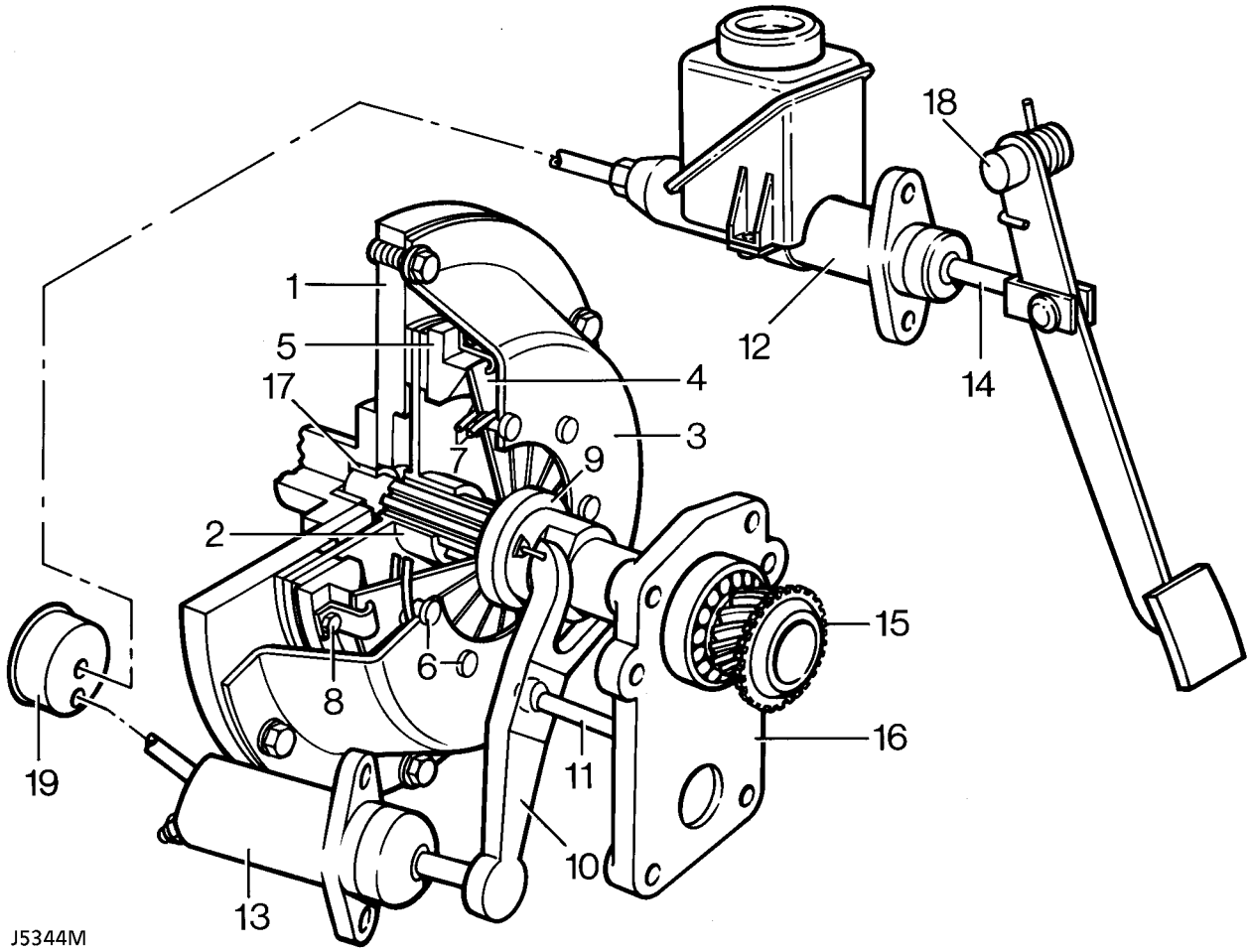

1. Crankshaft and flywheel
2. Friction plate
3. Clutch cover
4. Diaphragm spring
5. Pressure plate
6. Fulcrum posts (9) for diaphragm spring
7. Bearing rings (2) for diaphragm spring
8. Retraction links and bolts (3) for pressure plate
9. Release bearing
10. Release lever
11. Release lever pivot post
12. Master cylinder
13. Slave cylinder
14. Master cylinder pedal pushrod
15. Primary shaft and taper bearing (in gearbox)
16. Gearbox front cover
17. Primary shaft flywheel bush
18. Pedal pivot and return spring
19. Hydraulic damper (Diesel only)

FRONT STUB AXLE, CONSTANT VELOCITY JOINT AND SWIVEL PIN HOUSING NON ABS

Service repair no - 60.15.43.

Remove stub axle, axle shaft and constant velocity joint.

1. Remove front hub assembly. ***See Repair, Front Hub Assembly***
2. Drain swivel pin housing and refit plug.
3. Remove six bolts retaining stub axle to swivel housing.
4. Remove mud shield.
5. Remove stub axle and joint washer.

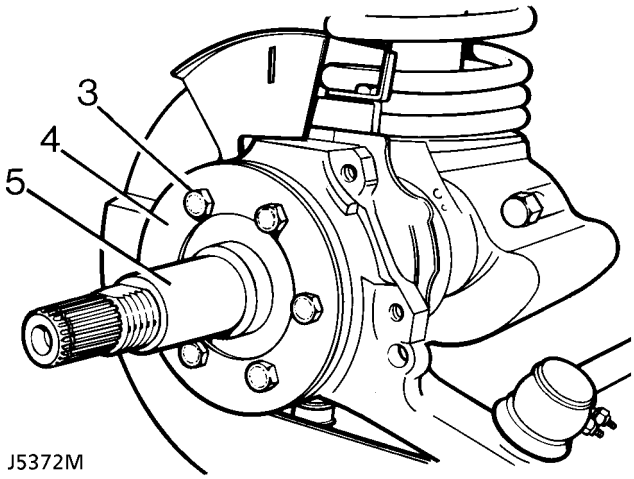

6. Pull out axle shaft and constant velocity joint from axle casing.

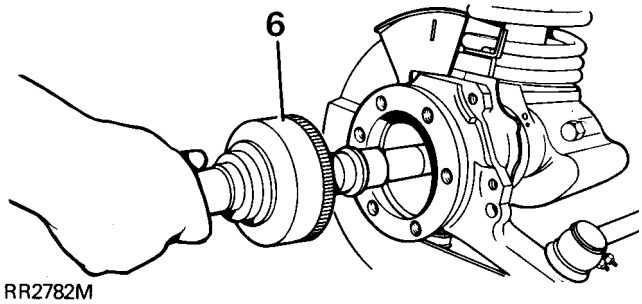

Remove constant velocity joint from axle shaft

7. Hold axle shaft firmly in a soft jawed vice.
8. Using a soft mallet drive constant velocity joint from shaft.
9. Remove circlip and collar from axle shaft.

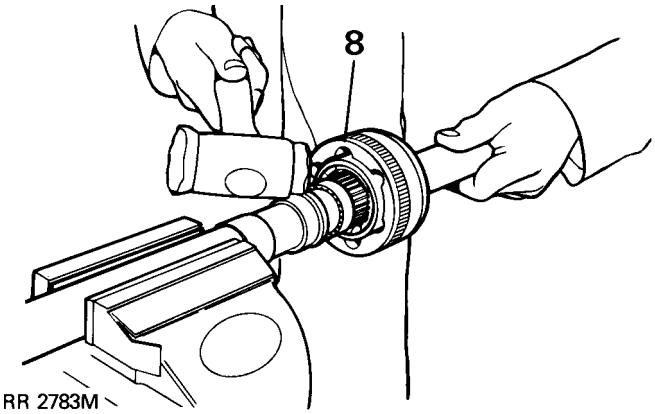

Constant velocity joint

10. Mark positions of constant velocity joint, inner and outer race and cage for reassembly.
11. Swivel cage and inner race to remove balls.

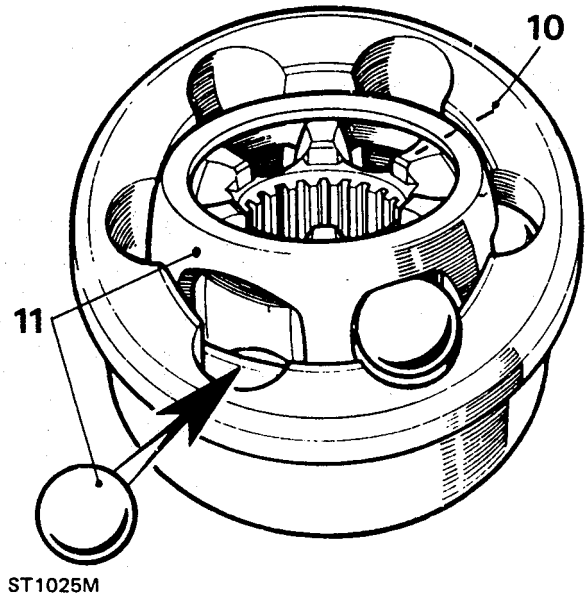

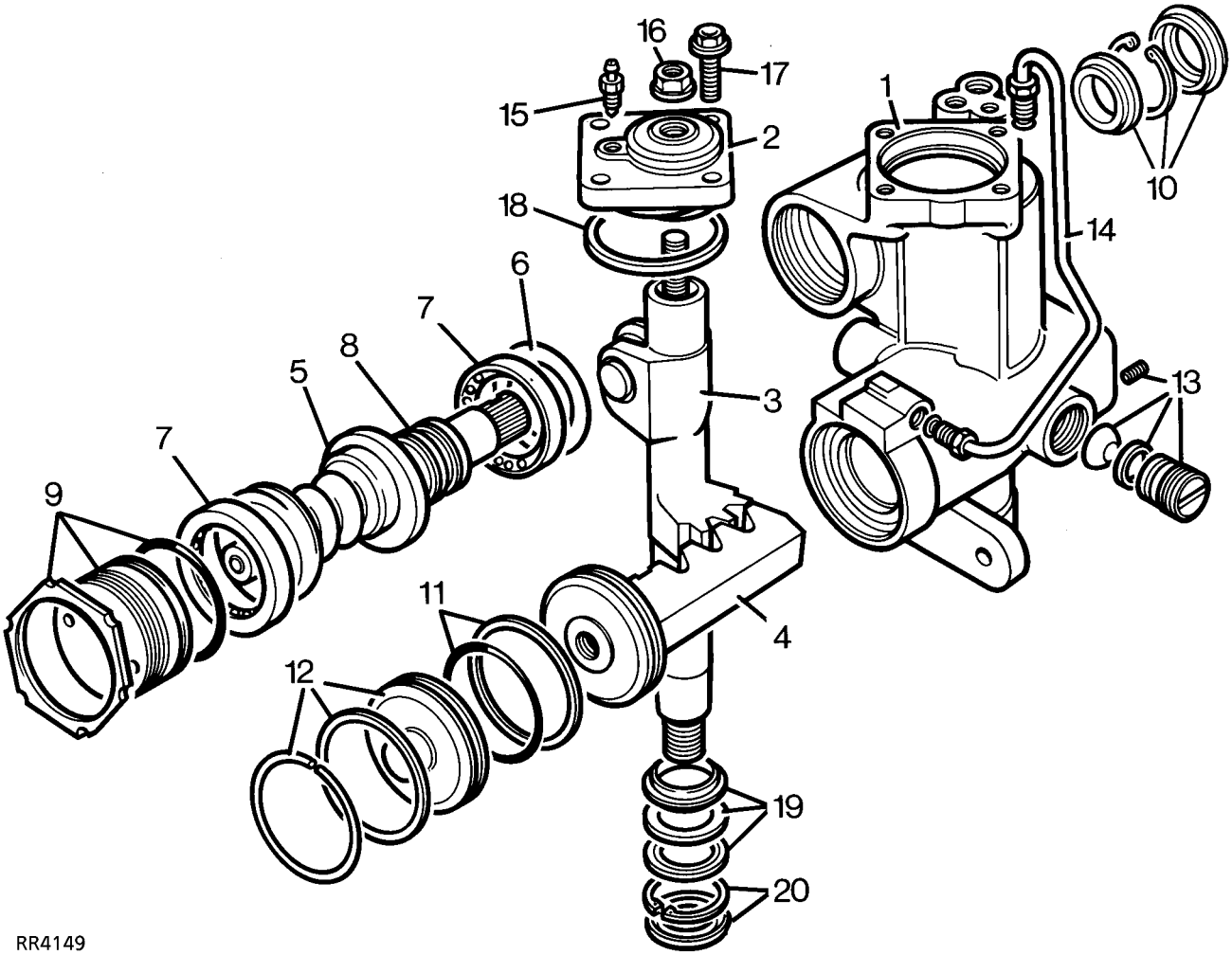

Power steering box components

1. Housing complete with sector shaft bearings
2. Cover plate complete with bearing
3. Sector shaft
4. Hydraulic piston/rack
5. Worm/valve and torsion bar assembly
6. Shims for centralizing worm/valve
7. Ball race (2)
8. 'Teflon' seals for valve sleeve (3)
9. Bearing adjuster, locknut and seal
10. Worm shaft pressure seal, circlip and dirt excluder
11. 'Teflon' and rubber seal for piston
12. End cover seal and snap ring
13. Adjustment components for piston/rack
14. Hydraulic pipe
15. Bleed screw
16. Sector shaft adjustment lock nut with seal
17. Cover plate bolts (4)
18. Cover plate seal
19. Seal, washer and backup seal
20. Circlip and dust cover

Demand for assistance (Valve misaligned)

When the steering wheel and input shaft is turned, steering resistance transmitted to the worm causes the torsion bar to be twisted and the valve ports to be misaligned for a right or left turn. The misalignment of the valve ports directs all fluid pressure A to one side of the piston only and allows displaced fluid B on the other side.

When demanding maximum assistance, any excessive fluid output from the pump due to high pump speed, will circulate through the regulator valve located in the pump unit, causing the temperature of the fluid and the pump to rise rapidly.
To avoid excessive fluid temperatures which could damage the oil seals, the steering must not be held on full lock for more that 30 seconds in one minute.

Only when the steering wheel and the demand for assistance is released, will the torsion bar return the valve to neutral, allowing the fluid to circulate through the reservoir where it is cooled.

In the unlikely event of mechanical failure of the torsion bar, a coarse splined connection (7) between the input shaft and worm, ensures steering control is maintained sufficient to allow the vehicle to be recovered.

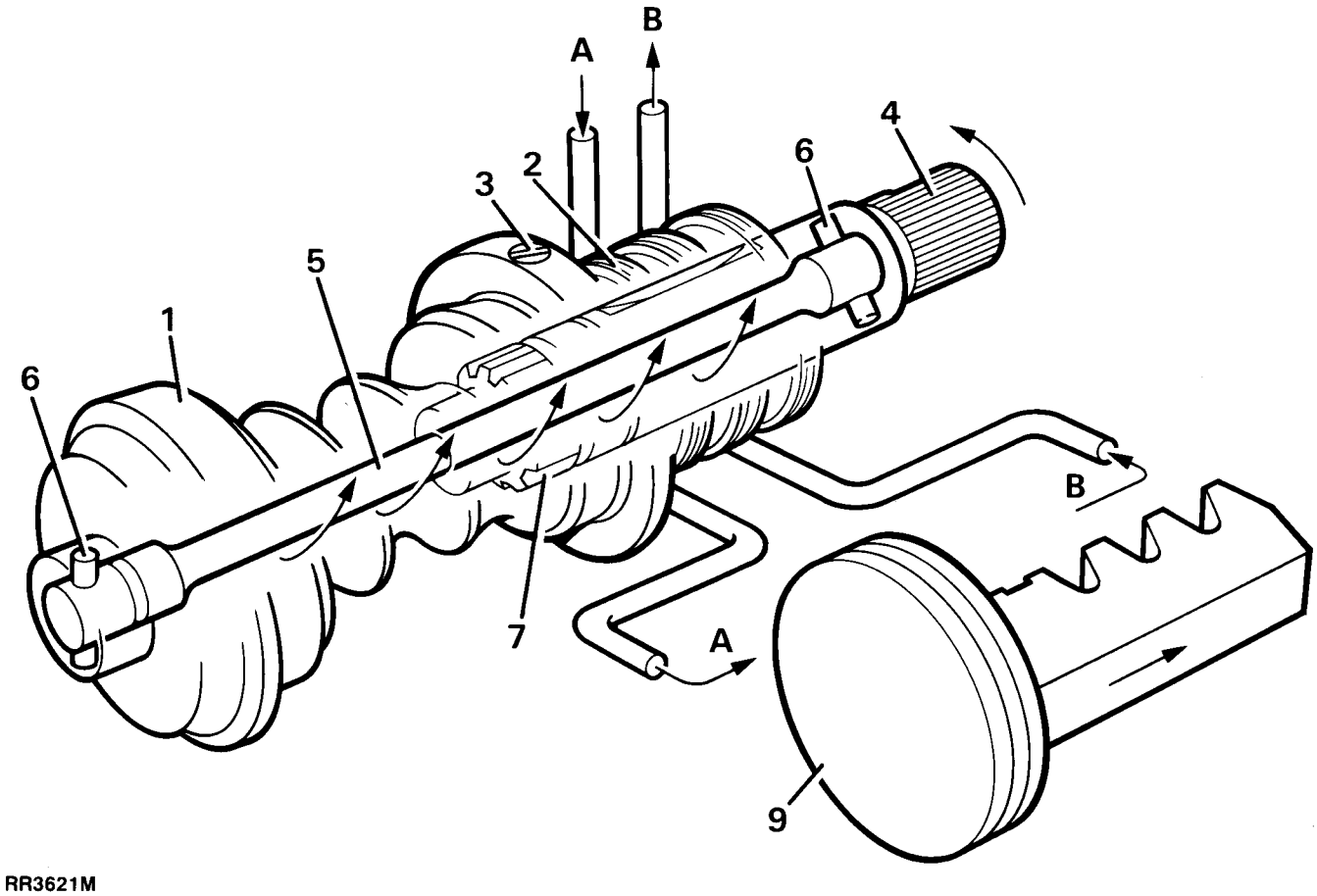

Rotary valve misaligned