SYSTEM INDEX

00 GENERAL INFORMATION

R READING WIRING DIAGRAMS
VEHICLE IDENTIFICATION NUMBER (VIN) CODE..... 2
VEHICLE IDENTIFICATION NUMBERS (VIN)..... 3
CONTENTS OF WIRING DIAGRAMS 4
GROUND POINTS 5
SYSTEM CIRCUIT DIAGRAM/CONNECTOR DIAGRAM 6
ROUTING DIAGRAM 8
HARNESS SYMBOLS..... 9
WIRING COLOR CODE..... 9
SYMBOLS 10
ABBREVIATIONS USED IN THIS MANUAL 12

P ELECTRICAL SYSTEM GENERAL PROCEDURES..... 14

POWER, GROUND & COMMON CONNECTOR

E ELECTRICAL WIRING SCHEMATIC 18
F FUSE BOX 20
C COMMON CONNECTOR LIST..... 22
G GROUND POINT..... 30

DATA LINK CONNECTOR

D DATA LINK CONNECTOR..... 34

01 ENGINE

12 COOLING SYSTEM..... 38
14 FUEL SYSTEM 40
17 CHARGING SYSTEM 42
19 STARTING SYSTEM..... 44
20 CRUISE CONTROL SYSTEM 46
40 CONTROL SYSTEM..... 48

03 DRIVELINE/AXLE

18 4-WHEEL DRIVE
ELECTRONIC AWD CONTROL SYSTEM..... 68

04 BRAKES

15 DYNAMIC STABILITY CONTROL (DSC)..... 70

05 TRANSMISSION/TRANSAXLE

17 AUTOMATIC TRANSAXLE
EC-AT CONTROL SYSTEM..... 74

07 HEATER, VENTILATION & AIR CONDITIONING (HVAC)

40 CONTROL SYSTEM
HEATER AND AIR CONDITIONER SYSTEM
MANUAL A/C..... 76
AUTO A/C 82
A/C COMPRESSOR CONTROL..... 88

08 RESTRAINTS

10 AIR BAG SYSTEM
AIR BAG SYSTEM SERVICE CAUTIONS/ SERVICE WARNINGS 90
AIR BAG SYSTEM (INCLUDES PRE-TENSIONER SEAT BELT INFORMATION)..... 92

09 BODY & ACCESSORIES

12 GLASS/WINDOWS/MIRRORS
REAR WINDOW DEFROSTER (INCLUDES HEATED OUTER MIRROR INFORMATION) 102
POWER WINDOW SYSTEM..... 104
POWER OUTER MIRROR 112

13 SEATS
SEAT WARMER..... 114
POWER SEAT 116

14 SECURITY AND LOCKS
IMMOBILIZER SYSTEM..... 118
KEYLESS ENTRY SYSTEM
WITHOUT ADVANCED KEYLESS SYSTEM..... 120
WITH ADVANCED KEYLESS SYSTEM 122

15 SUNROOF..... 128

18 LIGHTING SYSTEMS
HEADLIGHT
WITHOUT DRL..... 130
WITH DRL..... 134
AUTO LIGHT SYSTEM..... 140
LICENSE PLATE LIGHT..... 142
PARKING LIGHT 142
TAILLIGHT 142
FRONT FOG LIGHT 146
BACK-UP LIGHT 148
BRAKE LIGHT 150
HIGH-MOUNT BRAKE LIGHT..... 150
CARGO COMPARTMENT LIGHT 152
INTERIOR LIGHT 152
MAP LIGHT 152
HEADLIGHT LEVELING SYSTEM..... 154
ILLUMINATION LIGHT 156
TRAILER TOW 160

19 WIPER/WASHER SYSTEM
WINDSHIELD WIPER AND WASHER 162
REAR WIPER AND WASHER..... 164

20 ENTERTAINMENT
ACCESSORY SOCKET..... 166
AUDIO SYSTEM
STANDARD TYPE AUDIO
WITHOUT CAR-NAVIGATION SYSTEM 168
WITH CAR-NAVIGATION SYSTEM 172
Bose® TYPE AUDIO
WITHOUT CAR-NAVIGATION SYSTEM 182
WITH CAR-NAVIGATION SYSTEM 192

22 INSTRUMENTATION/DRIVER INFO.
INSTRUMENT CLUSTER..... 206
HORN 216
INFORMATION DISPLAY 218

40 CONTROL SYSTEM
BCM (BODY CONTROL MODULE)..... 220

AI ALPHABETICAL INDEX

ALPHABETICAL INDEX 242

Two digits (section ID) indicated in front of each title are commonly used with the Workshop Manual.

Reading Wiring Diagrams

CONTENTS OF WIRING DIAGRAMS

- This manual comprises the sections shown below.

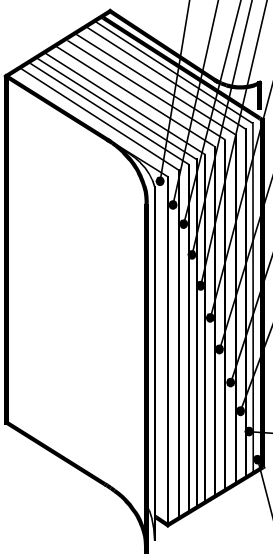

NEW					PREVIOUS	
GENERAL INFORMATION	00	R	Reading wiring diagrams	A how-to on using and reading wiring diagrams, using test equipment, checking harness and connectors, and finding trouble spots	GI	General information of wiring diagrams
		P	Electrical system general procedures			
		E	Electrical wiring schematic	Shows main fuses and other fuses for each system	W	Electrical wiring schematic
		F	Fuse box complete wiring system	Shows internal circuits and connectors	FB	Fuse block complete wiring system
		J	Joint box/Junction box complete wiring system		JB	Joint box complete wiring system
		C	Common connector list	Shows connectors common throughout system	X	Common connector list
		G	Ground point	Ground routes from and to the battery	Y	Ground point
		D	Data link connector	Shows circuit and connector diagrams and component and connector location diagrams	U	Data link connector
ENGINE	01	12	Cooling system		A	Charging system/Starting system
		14	Fuel system			
		17	Charging system		B	Engine control system
		18	Ignition system		C	Gauge control system
		19	Starting system		D	Wiper system
		20	Cruise control system		E	Lighting system
		40	Control system		F	Signal system
SUSPENSION	02	12	Wheel and tires		G	Air-conditioning system
DRIVELINE/AXLE	03	18	4-Wheel drive			
BRAKES	04	13	Antilock brake system		H	Transmission control/Key interlock/Shift-lock system
		14	Traction control system			
		15	Dynamic stability control		I	Interior light system
TRANSMISSION/ TRANSAXLE	05	13	Automatic transmission			
		14	Automatic transmission shift mechanism		J	Audio/Radio system
		17	Automatic transaxle			
		18	Automatic transaxle shift mechanism		K	Power window/Power door lock system
STEERING	06	13	Electric power steering (EPS)			
		14	Power steering			
HEATER, VENTILATION & AIR CONDITIONING (HVAC)	07	40	Control system		L	Remote control mirror system
RESTRAINTS	08	10	Air bag system			
		11	Seat belt		M	Sliding sunroof system
BODY & ACCESSORIES	09	12	Glass/Windows/Mirrors		O	Anti-lock brake system
		13	Seats			
		14	Security and locks		N	Electric power steering (EPS)
		15	Sunroof			
		18	Lighting systems		P	Power seat/Seat warmer system
		19	Wiper/Washer system			
		20	Entertainment		Q	Auto cruise control system
		21	Power systems			
		22	Instrumentation/Driver info.		S	Air bag system
		40	Control system		T	Others
AI			Alphabetical Index	Gives page number of circuit diagram for each component	AI	Alphabetical Index

Depending on the vehicle model, the actual sections may be different.

- Connectors can be disconnected by pressing or pulling the lock lever as shown.

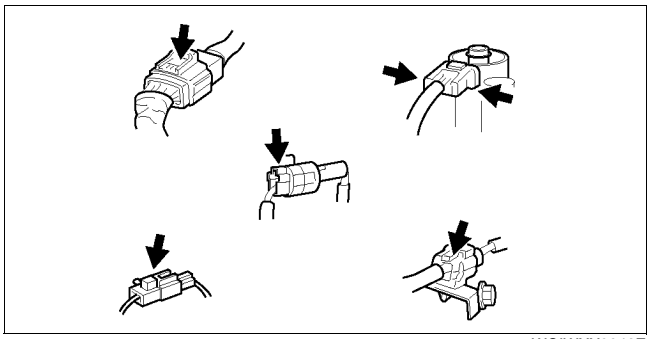

WGIWXX0042E

Locking Connector

- When locking connectors, listen for a click indicating they are securely locked.

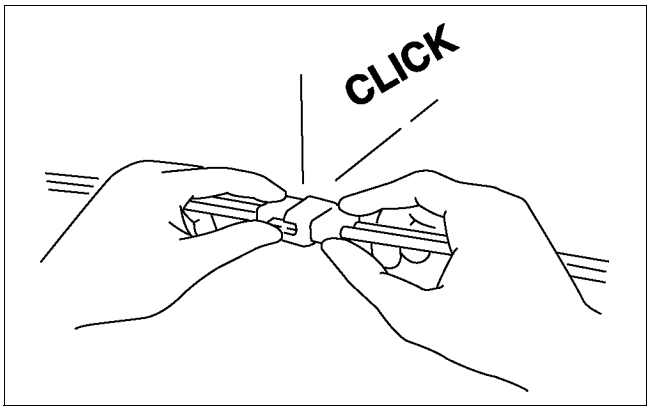

X3U000WB1

Inspection

- When a tester is used to inspect for continuity or measuring voltage, insert the tester probe from the wiring harness side.

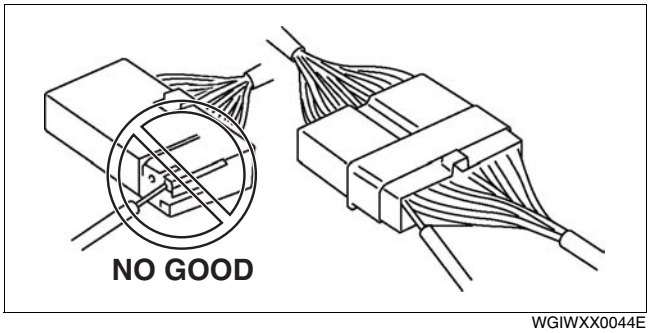

WGIWXX0044E

- Inspect the terminals of waterproof connectors from the connector side since they cannot be accessed from the wiring harness side.

  Caution
  - **To prevent damage to the terminal, wrap a thin wire around the tester probe before inserting into terminal.**

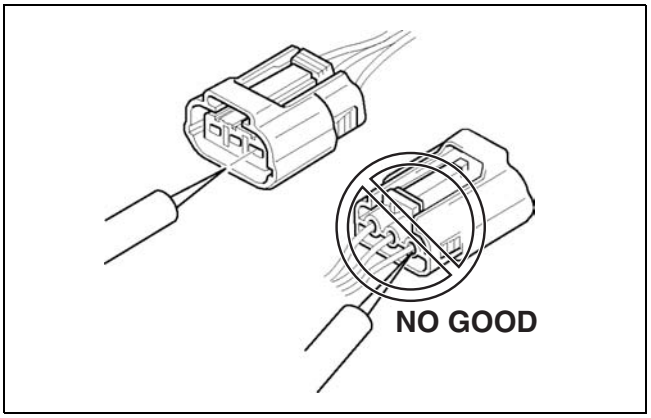

WGIWXX0045E

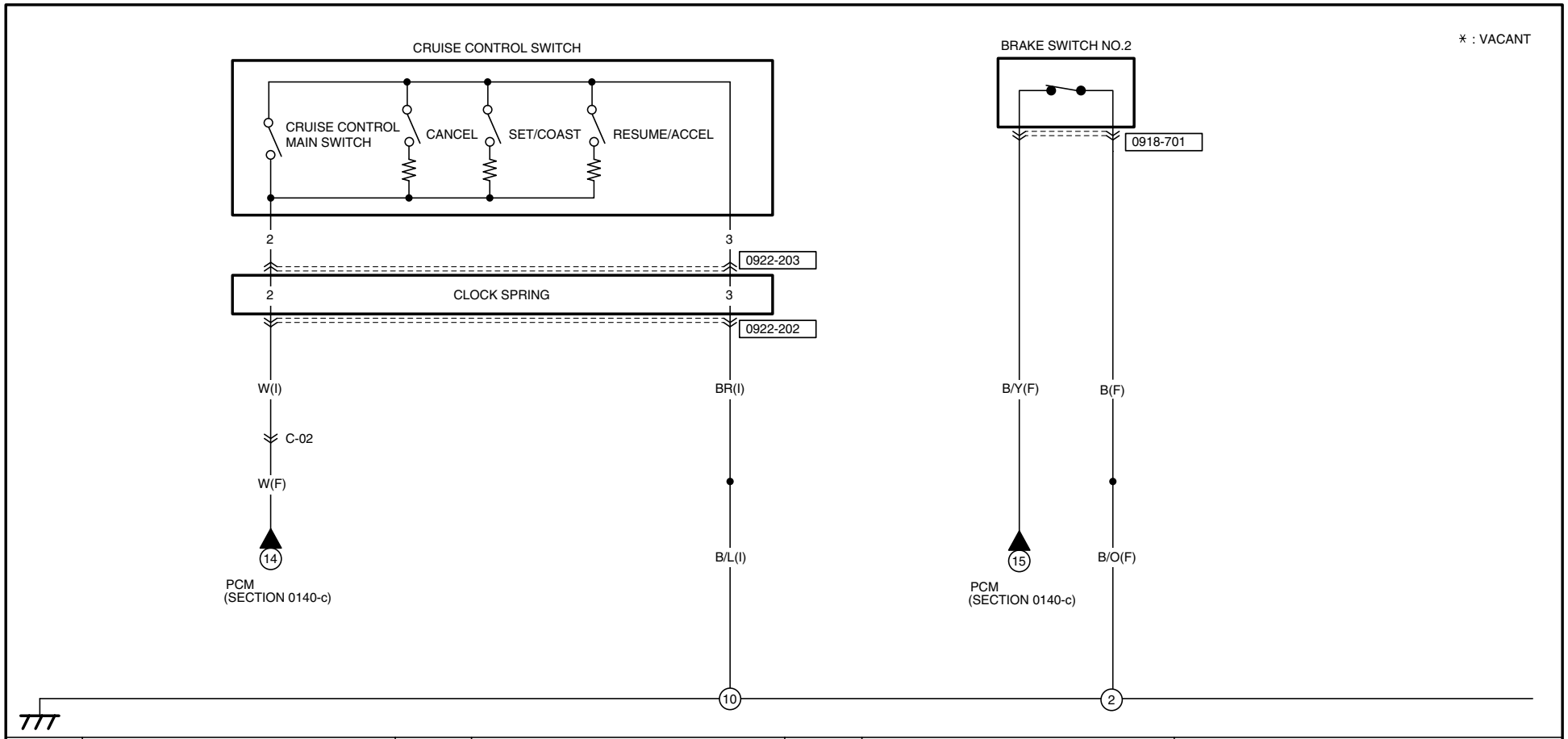

0918-701	0922-202	0922-203	
BRAKE SWITCH NO.2(F)	CLOCK SPRING(I)	CRUISE CONTROL SWITCH(CLOCK SPRING)	
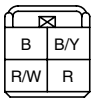	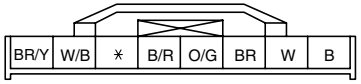	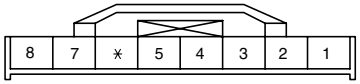	

TERMINALS OF THIS CONNECTOR ARE INDICATED BY NUMBERS.

Refer to 00F section and 00C section for FUSE BOX and COMMON CONNECTOR LIST.

HARNESS SYMBOL : (F) (R)

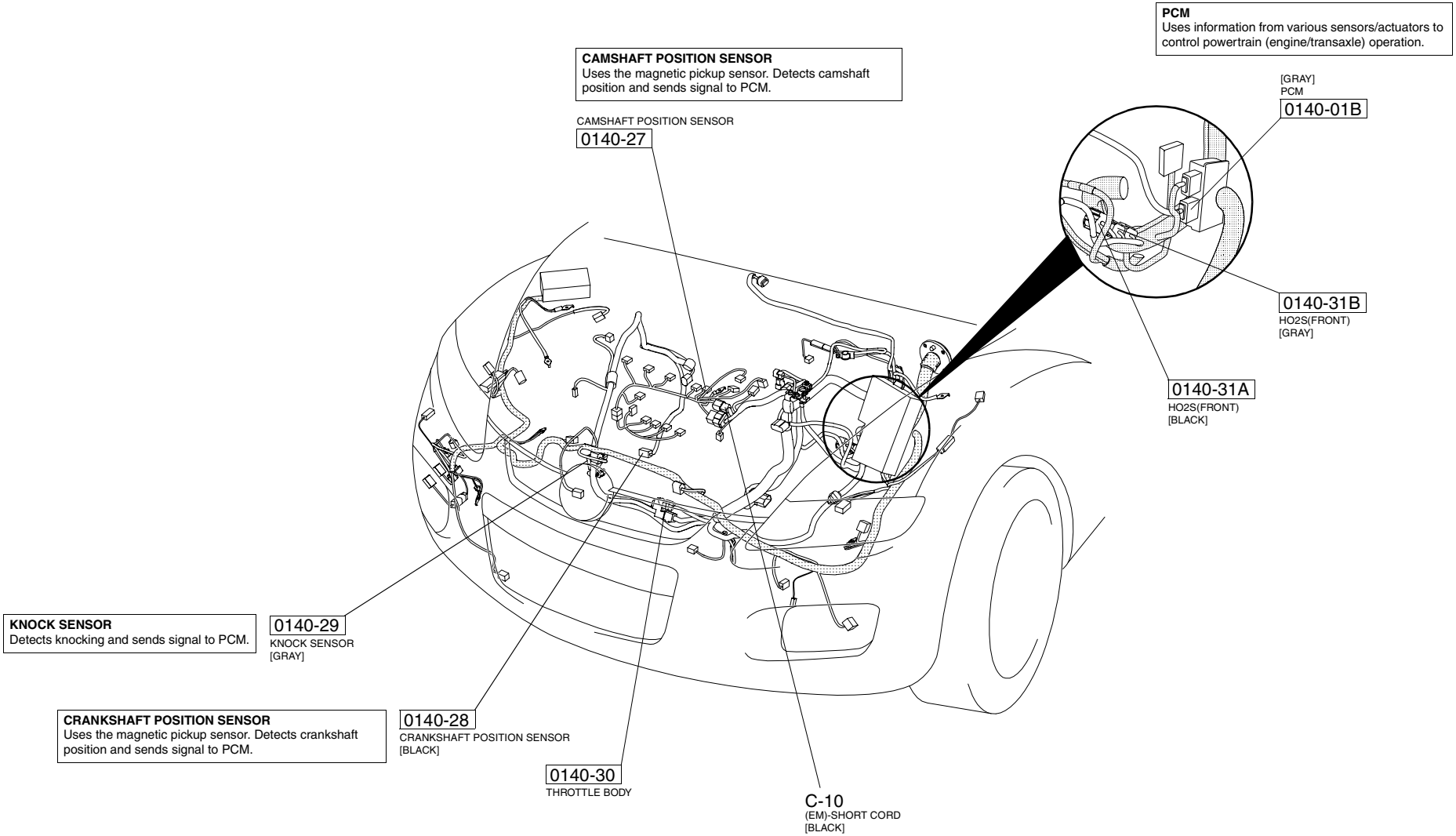

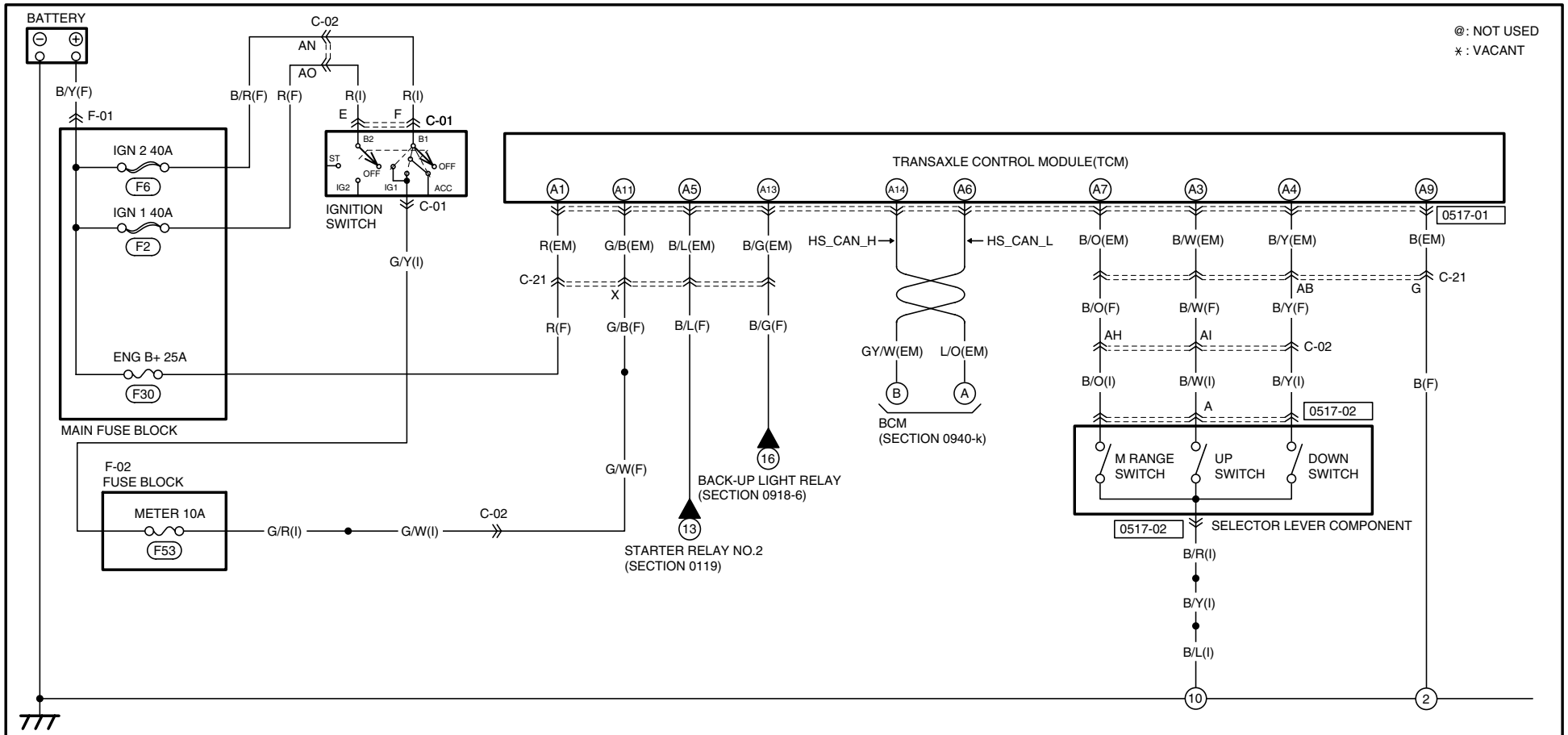

0517-01

TCM(EM)

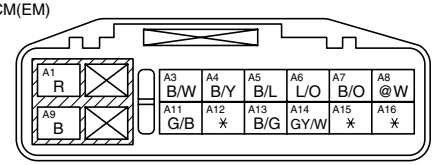

0517-02

SELECTOR LEVER COMPONENT(I)

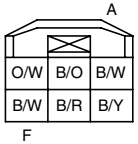

Refer to 00F section and 00C section for FUSE BOX and COMMON CONNECTOR LIST.

AIR BAG SYSTEM

AIR BAG SYSTEM SERVICE WARNINGS id081000800200

Air Bag Module Inspection

- **IInspecting an air bag module using a tester can operate (deploy) the air bag module, which may cause serious injury. Do not use a tester to inspect an air bag module. Always use the on-board diagnostic function to diagnose the air bag module for malfunctions.**

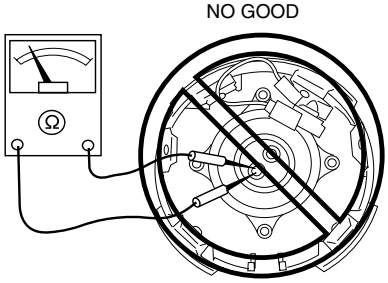

acxuuw00001174

Air Bag Module Handling

- **Before removing the air bag module or disconnecting the air bag module connector, always turn the ignition switch to the LOCK position, disconnect the negative battery cable, and then wait for 1 min or more to allow the backup power supply of the SAS control module to deplete its stored power.**
- **Handling a live (undeployed) air bag module that is pointed toward your body could result in serious injury if the air bag module were to accidentally operate (deploy). When carrying a live (undeployed) air bag module, point the deployment surface away from your body to lessen the chance of injury in case it operates (deploys).**

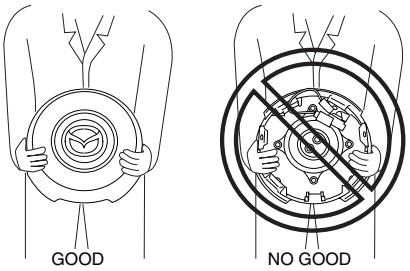

acxuuw00001175

- **A live (undeployed) air bag module placed with its deployment surface to ground is dangerous. If the air bag module were to accidentally operate (deploy), it could cause serious injury. Always place a live (undeployed) air bag module with its deployment surface up.**

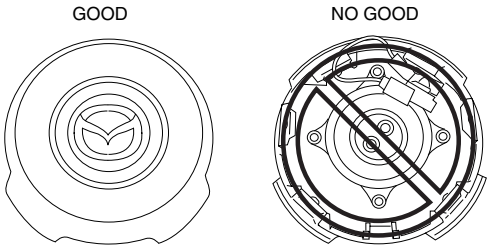

acxuuw00001176

Side Air Bag Module Handling

- **Before removing the side air bag module or disconnecting the side air bag module connector, always turn the ignition switch to the LOCK position, disconnect the negative battery cable, and then wait for 1 min or more to allow the backup power supply of the SAS control module to deplete its stored power.**
- **When a side air bag module operates (deploys) due to a collision, the interior of the seat back (pad, frame, trim) may become damaged. If a side air bag does not operate (deploy) normally from a seat back that has been reused, a serious accident may result. After a side air bag has operated (deployed), always replace both the side air bag module and the seat back (pad, frame, trim) with new parts. After servicing, verify that the seat operates normally and that the wiring harness is not caught.**

Seat Weight Sensor Handling

- **The passenger-side seat and the seat weight sensor may become deformed or otherwise damaged due to operation (deployment) of the front or side air bag in an accident. This may cause the passenger sensing function to operate improperly and result in a serious accident. Always replace the passenger seat and seat weight sensor with new ones after the front or side air bags have operated (deployed). After servicing, verify that the seat operates normally and that the wiring harness is not caught. If the collision is not hard enough to cause the front or side air bags to operate (deploy), inspect the seat weight sensor and replace it if there is any malfunction.**

SAS Control Module Handling

- **Removing the SAS control module or disconnecting the SAS control module connector with the ignition switch at the ON position can activate the sensor in the SAS control module and operate (deploy) the air bags and pre-tensioner seat belts, which may cause serious injury. Before removing the SAS control module or disconnecting the SAS control module connector, always turn the ignition switch to the LOCK position, disconnect the negative battery cable, and then wait for 1 min or more to allow the backup power supply of the SAS control module to deplete its stored power.**
- **Connecting the SAS control module connector with the SAS control module not securely fixed to the vehicle is dangerous. The sensor in the SAS control module could send an electrical signal to the air bag modules and pre-tensioner seat belts. This will operate (deploy) the air bags and pre-tensioner seat belts, which may result in serious injury. Therefore, before connecting the connector, securely fix the SAS control module to the vehicle.**
- **Because a sensor is built into the SAS control module, once the air bags and pre-tensioner seat belts have operated (deployed) due to a collision or other causes, the SAS control module must be replaced with a new one even if the used one does not have any visible external damage or deformation. The used SAS control module may have been damaged internally, which may cause improper operation. If the SAS control module is reused, the air bags and pre-tensioner seat belts may not operate (deploy) normally, which could result in a serious accident. Always replace the SAS control module with a new one. The SAS control module cannot be bench-checked or self-checked.**

Crash Zone Sensor Handling

- **Removing the crash zone sensor or disconnecting the crash zone sensor connector with the ignition switch at the ON position can activate the crash zone sensor and operate (deploy) the air bags and pre-tensioner seat belts, which may cause serious injury. Before removing the crash zone sensor or disconnecting the crash zone sensor connector, always turn the ignition switch to the LOCK position, disconnect the negative battery cable, and then wait for 1 min or more to allow the backup power supply of the SAS control module to deplete its stored power.**
- **If the crash zone sensor is subjected to shock or the sensor is disassembled, the air bags and pre-tensioner seat belts may accidentally operate (deploy) and cause injury, or the system may fail to operate normally and cause a serious accident. Do not subject the crash zone sensor to shock or disassemble the sensor.**
- **Because a sensor is built into the crash zone sensor, once the air bags and pre-tensioner seat belts have operated (deployed) due to a collision or other causes, the crash zone sensor must be replaced with a new one even if the used one does not have any visible external damage or deformation. If the crash zone sensor is reused, the air bags and pre-tensioner seat belts may not operate (deploy) normally, which could result in a serious accident. Always replace the crash zone sensor with a new one. The crash zone sensor cannot be bench-checked or self-checked.**

REAR WINDOW DEFROSTER (INCLUDES HEATED OUTER MIRROR INFORMATION)

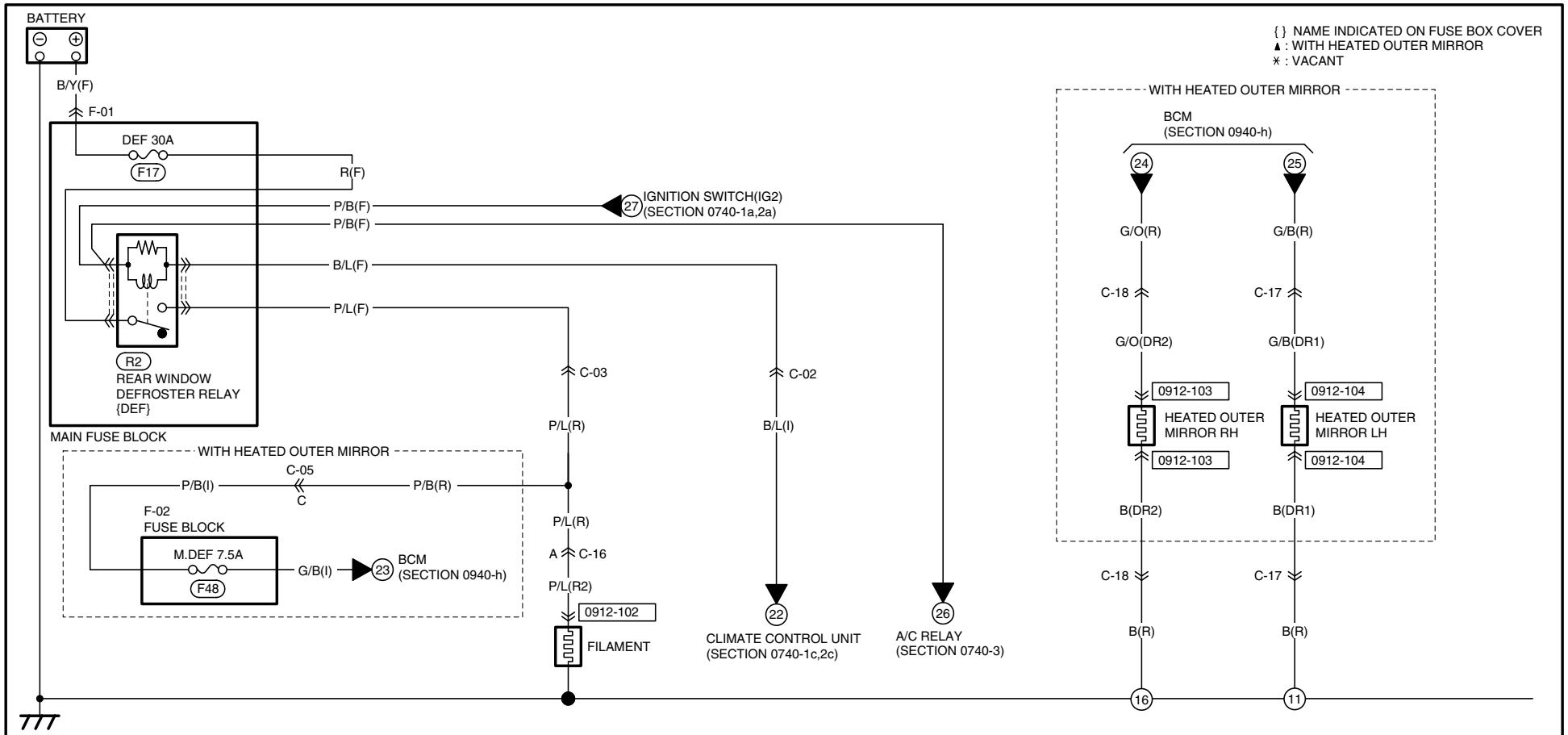

0912-102	0912-103	0912-104	
FILAMENT(R2)	HEATED OUTER MIRROR RH(DR2)	HEATED OUTER MIRROR LH(DR1)	
P/L	✳ ▲B ✳ W/G; ✳ ✳ L/Y; ✳ ▲G/O ✳ Y/V	✳ ▲B ✳ W; ✳ ✳ L/R; ✳ ▲G/B ✳ Y/L	

Refer to 00F section and 00C section for FUSE BOX and COMMON CONNECTOR LIST.

SEAT WARMER

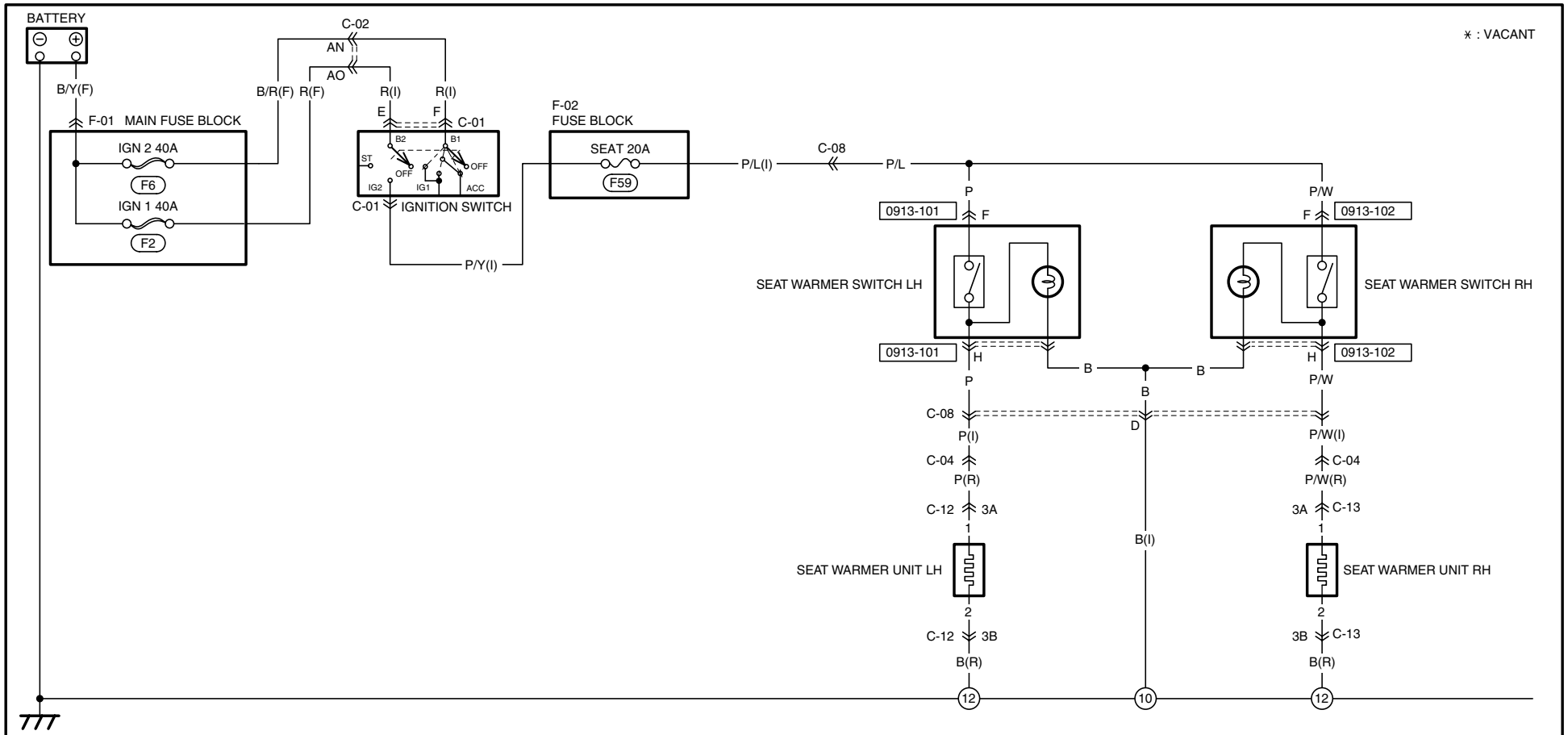

0913-101	0913-102		
SEAT WARMER SWITCH LH(SHORT CORD)	SEAT WARMER SWITCH RH(SHORT CORD)		
O/Y, B/L; H P, F P, ∗, B	O/L, B/Y; H P/W, F P/W, ∗, B		

Refer to 00F section and 00C section for FUSE BOX and COMMON CONNECTOR LIST.

HEADLIGHT (WITHOUT DRL)

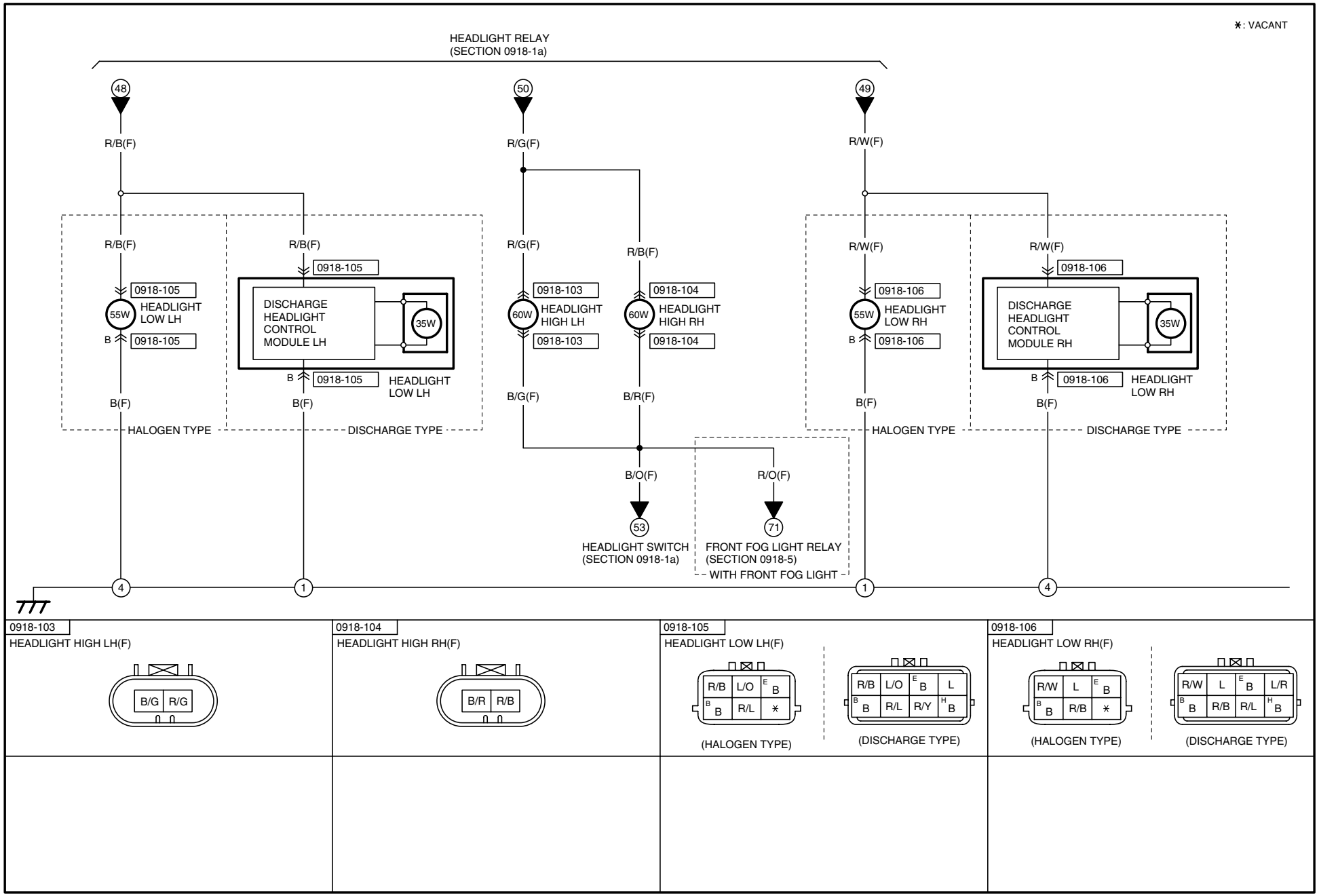

Refer to 00F section and 00C section for FUSE BOX and COMMON CONNECTOR LIST.

HARNESS SYMBOL : (F) (R)

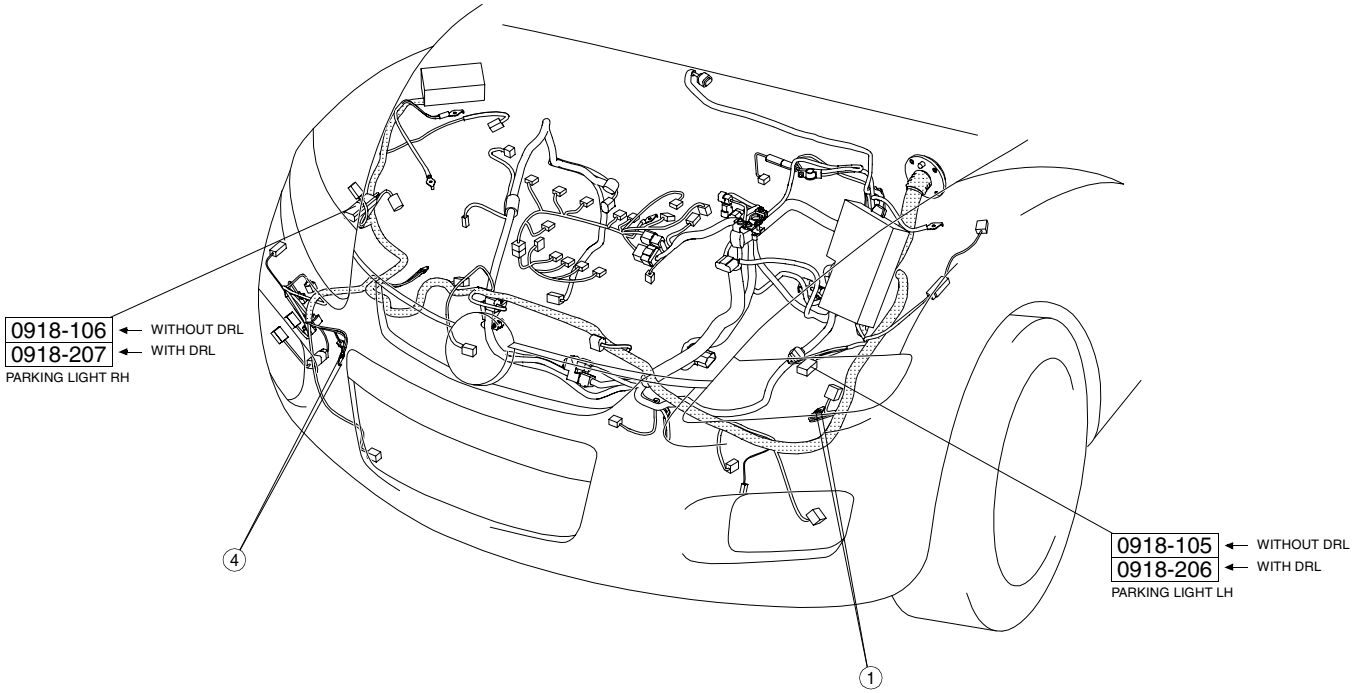

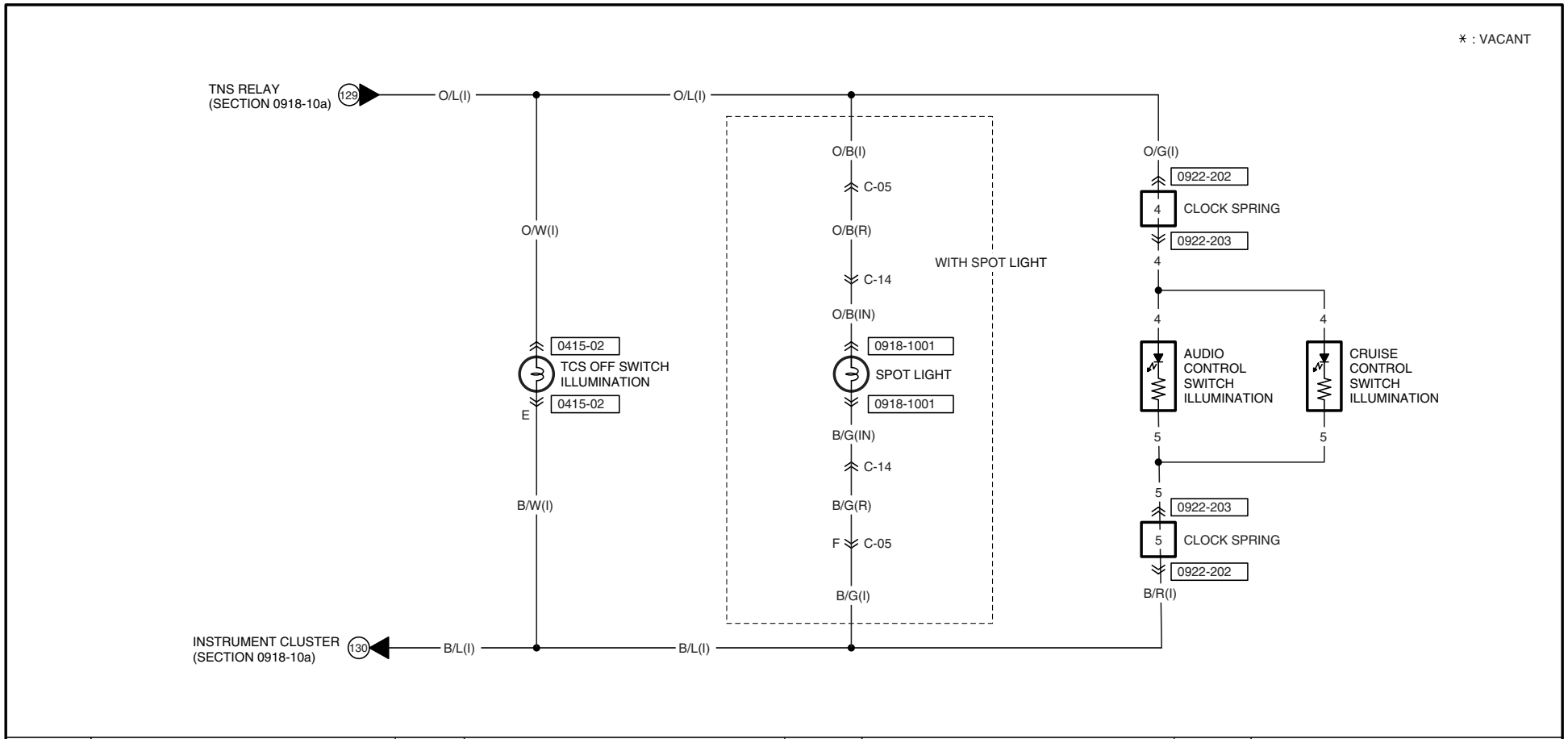

0918-1001	0415-02	0922-202	0922-203
SPOT LIGHT(IN)	TCS OFF SWITCH ILLUMINATION(I)	CLOCK SPRING(I)	AUDIO CONTROL SWITCH ILLUMINATION/ CRUISE CONTROL SWITCH ILLUMINATION(CLOCK SPRING)
O/B B/G	O/W E B/W * C B/W * A B/W	BR/Y W/B * B/R O/G BR W B	8 7 * 5 4 3 2 1
(WITH SPOT LIGHT)			TERMINALS OF THIS CONNECTOR ARE INDICATED BY NUMBERS.

Refer to 00F section and 00C section for FUSE BOX and COMMON CONNECTOR LIST.

HARNESS SYMBOL : (F) (R)

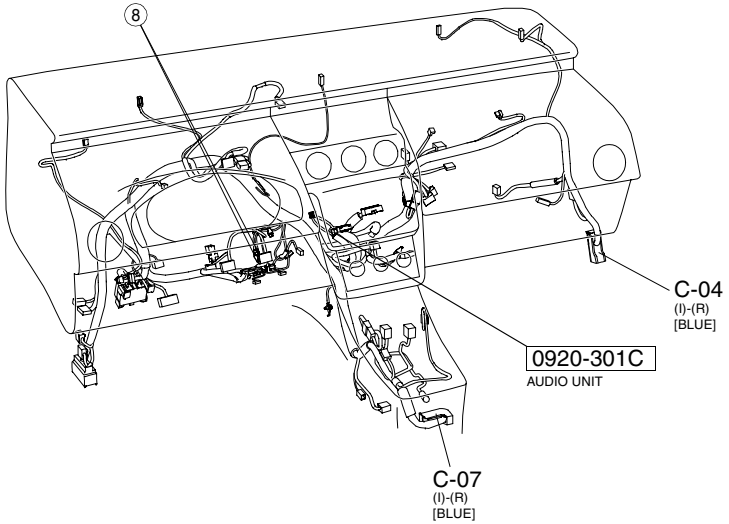

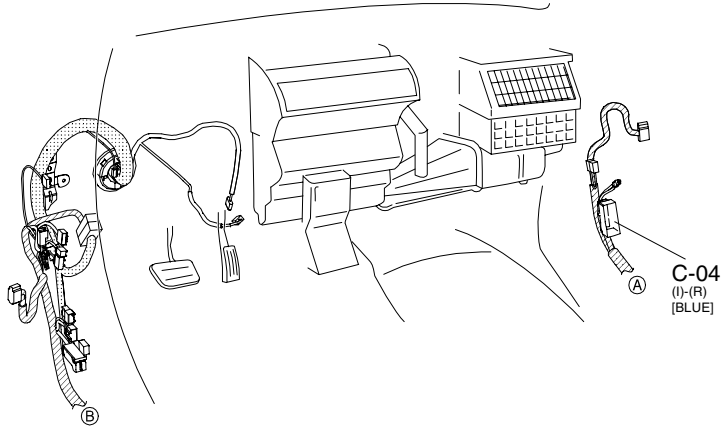

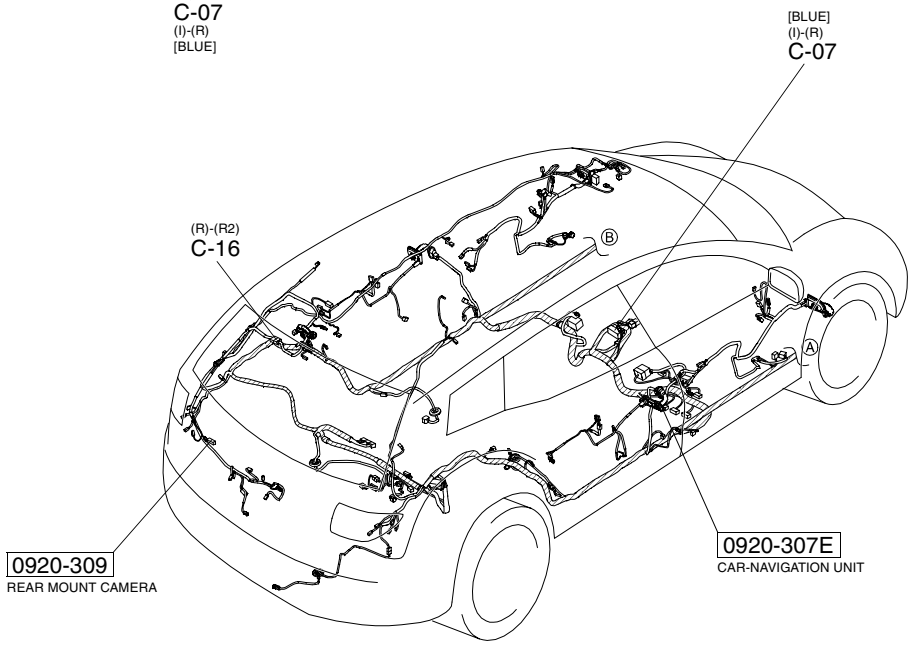

HARNESS SYMBOL : (F) (R)

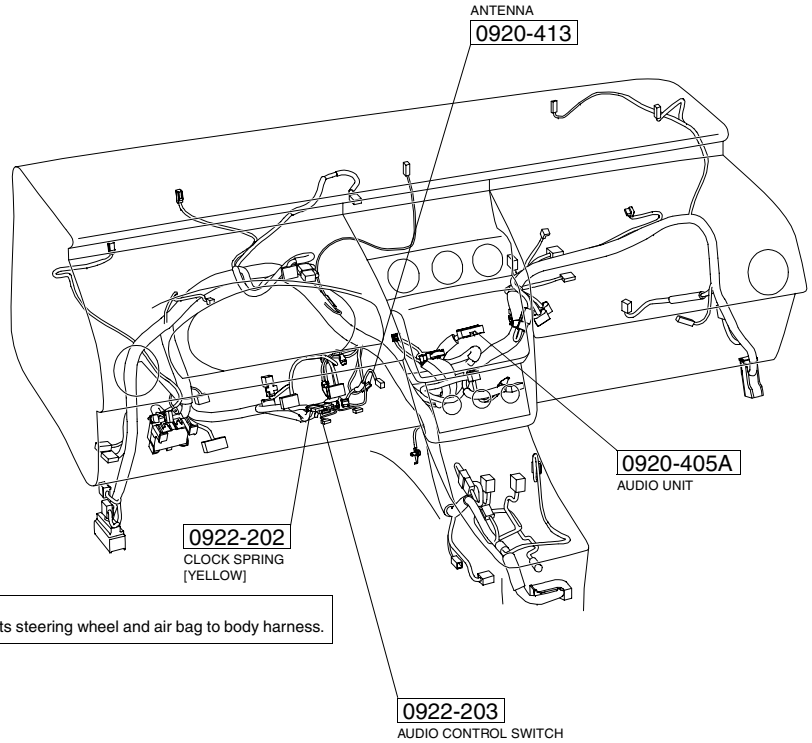

CLOCK SPRING
Electrically connects steering wheel and air bag to body harness.

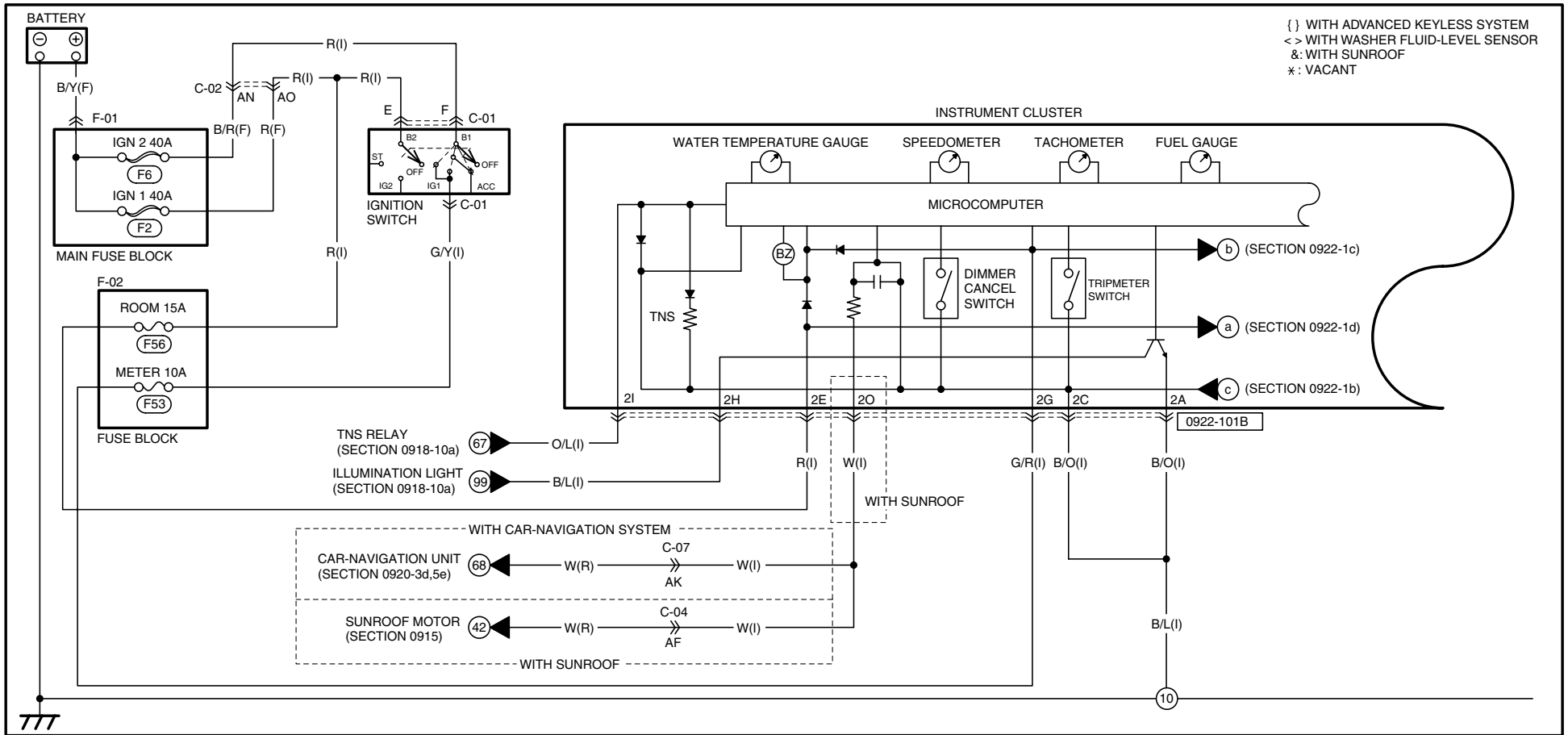

0922-101B

INSTRUMENT CLUSTER(I)

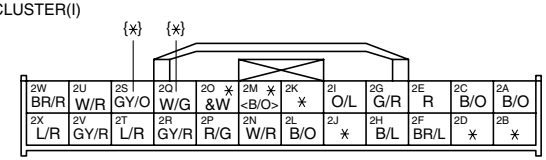

Refer to 00F section and 00C section for FUSE BOX and COMMON CONNECTOR LIST.