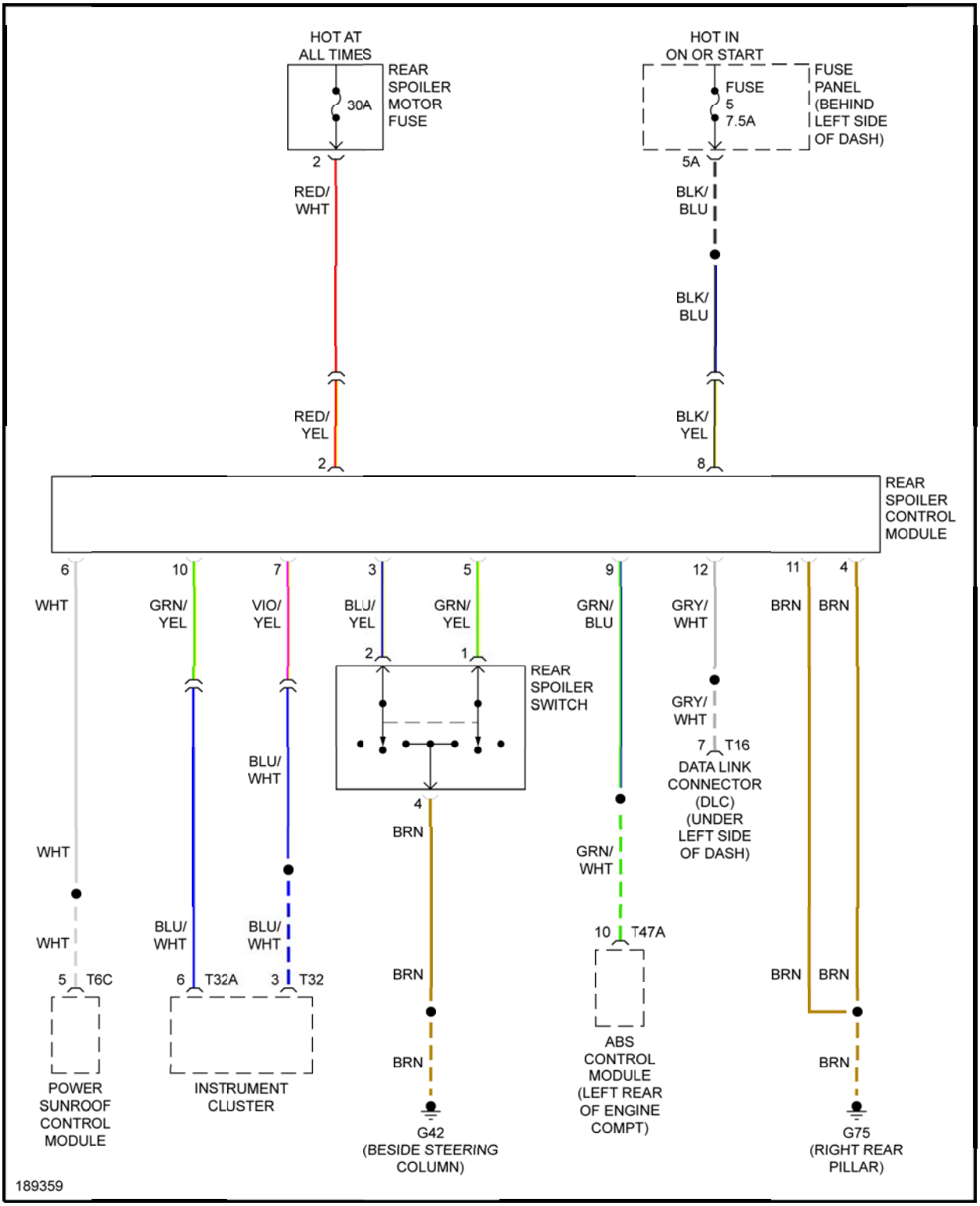
HOT AT ALL TIMES
REAR SPOILER MOTOR FUSE
30A
2
RED/ WHT
RED/ YEL
2
HOT IN ON OR START
FUSE PANEL (BEHIND LEFT SIDE OF DASH)
FUSE 5 7.5A
5A
BLK/ BLU
BLK/ BLU
BLK/ YEL
8
REAR SPOILER CONTROL MODULE
6
WHT
WHT
WHT
5 T6C
POWER SUNROOF CONTROL MODULE
10
GRN/ YEL
BLU/ WHT
6 T32A
INSTRUMENT CLUSTER
7
VIO/ YEL
BLU/ WHT
BLU/ WHT
3 T32
3
BLU/ YEL
2
5
GRN/ YEL
1
REAR SPOILER SWITCH
4
BRN
BRN
BRN
G42 (BESIDE STEERING COLUMN)
9
GRN/ BLU
GRN/ WHT
10 T47A
ABS CONTROL MODULE (LEFT REAR OF ENGINE COMPT)
12
GRY/ WHT
GRY/ WHT
7 T16
DATA LINK CONNECTOR (DLC) (UNDER LEFT SIDE OF DASH)
11
BRN
BRN
4
BRN
BRN
BRN
G75 (RIGHT REAR PILLAR)
189359

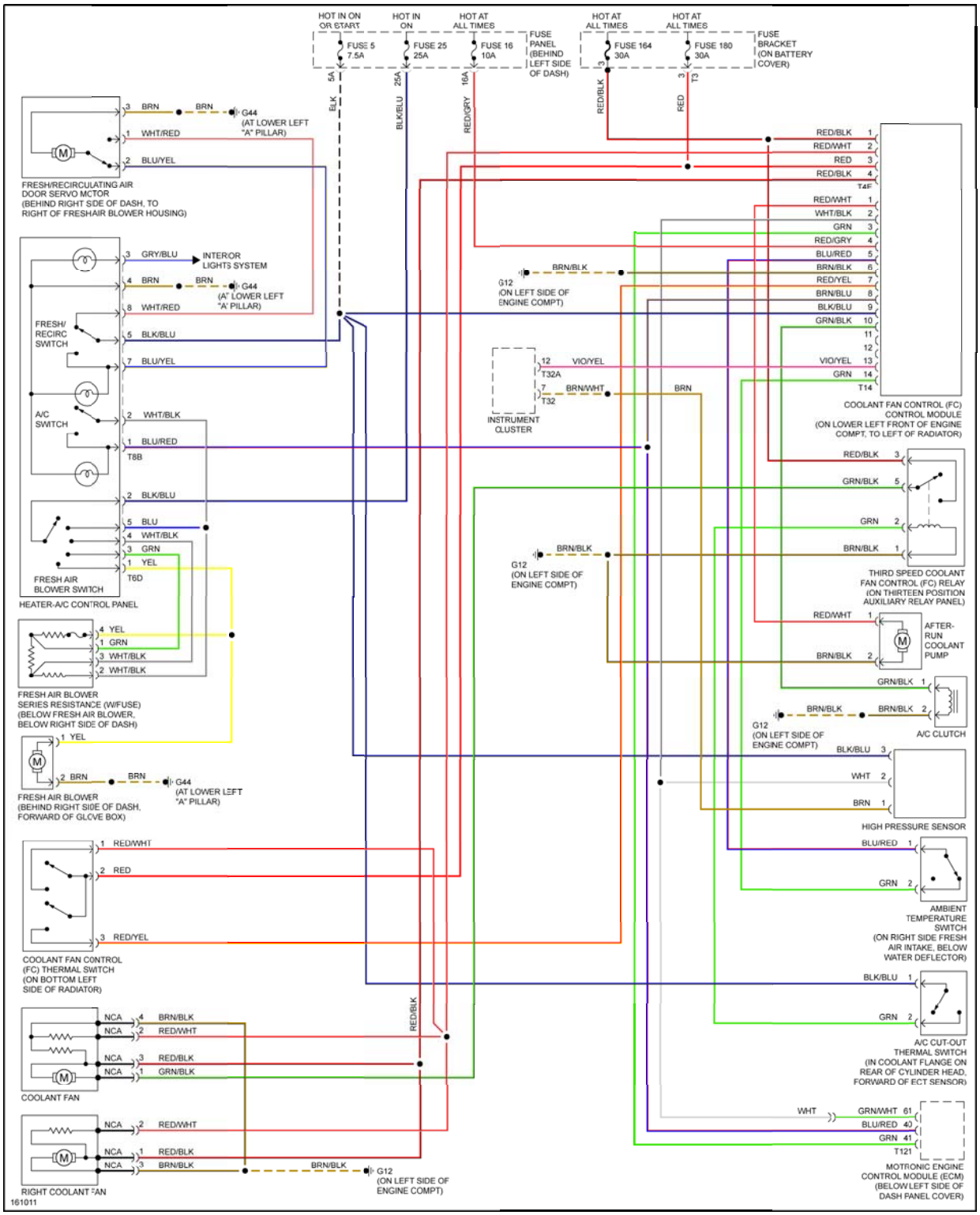
HOT IN ON OR START
HOT IN ON
HOT AT ALL TIMES
FUSE 5 7.5A
FUSE 25 25A
FUSE 16 10A
FUSE PANEL (BEHIND LEFT SIDE OF DASH)
HOT AT ALL TIMES
HOT AT ALL TIMES
FUSE 164 30A
FUSE 180 30A
FUSE BRACKET (ON BATTERY COVER)
5A
BLK
25A
BLK/BLU
16A
RED/GRY
RED/BLK
RED
T3
FRESH/RECIRCULATING AIR DOOR SERVO MOTOR (BEHIND RIGHT SIDE OF DASH, TO RIGHT OF FRESHAIR BLOWER HOUSING)
3 BRN
BRN
G44 (AT LOWER LEFT "A" PILLAR)
1 WHT/RED
2 BLU/YEL
3 GRY/BLU
INTERIOR LIGHTS SYSTEM
4 BRN
BRN
G44 (AT LOWER LEFT "A" PILLAR)
8 WHT/RED
FRESH/ RECIRC SWITCH
5 BLK/BLU
7 BLU/YEL
A/C SWITCH
2 WHT/BLK
1 BLU/RED
T8B
2 BLK/BLU
5 BLU
4 WHT/BLK
3 GRN
1 YEL
T6D
FRESH AIR BLOWER SWITCH
HEATER-A/C CONTROL PANEL
4 YEL
1 GRN
3 WHT/BLK
2 WHT/BLK
FRESH AIR BLOWER SERIES RESISTANCE (W/FUSE) (BELOW FRESH AIR BLOWER, BELOW RIGHT SIDE OF DASH)
1 YEL
2 BRN
BRN
G44 (AT LOWER LEFT "A" PILLAR)
FRESH AIR BLOWER (BEHIND RIGHT SIDE OF DASH, FORWARD OF GLOVE BOX)
1 RED/WHT
2 RED
3 RED/YEL
COOLANT FAN CONTROL (FC) THERMAL SWITCH (ON BOTTOM LEFT SIDE OF RADIATOR)
NCA 4 BRN/BLK
NCA 2 RED/WHT
NCA 3 RED/BLK
NCA 1 GRN/BLK
COOLANT FAN
NCA 2 RED/WHT
NCA 1 RED/BLK
NCA 3 BRN/BLK
BRN/BLK
G12 (ON LEFT SIDE OF ENGINE COMPT)
RIGHT COOLANT FAN
161011
BRN/BLK
G12 (ON LEFT SIDE OF ENGINE COMPT)
12 VIO/YEL
T32A
7 BRN/WHT
T32
BRN
INSTRUMENT CLUSTER
BRN/BLK
G12 (ON LEFT SIDE OF ENGINE COMPT)
RED/BLK 1
RED/WHT 2
RED 3
RED/BLK 4
T4F
RED/WHT 1
WHT/BLK 2
GRN 3
RED/GRY 4
BLU/RED 5
BRN/BLK 6
RED/YEL 7
BRN/BLU 8
BLK/BLU 9
GRN/BLK 10
11
12
VIO/YEL 13
GRN 14
T14
COOLANT FAN CONTROL (FC) CONTROL MODULE (ON LOWER LEFT FRONT OF ENGINE COMPT, TO LEFT OF RADIATOR)
RED/BLK 3
GRN/BLK 5
GRN 2
BRN/BLK 1
THIRD SPEED COOLANT FAN CONTROL (FC) RELAY (ON THIRTEEN POSITION AUXILIARY RELAY PANEL)
RED/WHT 1
BRN/BLK 2
AFTER-RUN COOLANT PUMP
GRN/BLK 1
BRN/BLK
BRN/BLK 2
A/C CLUTCH
G12 (ON LEFT SIDE OF ENGINE COMPT)
BLK/BLU 3
WHT 2
BRN 1
HIGH PRESSURE SENSOR
BLU/RED 1
GRN 2
AMBIENT TEMPERATURE SWITCH (ON RIGHT SIDE FRESH AIR INTAKE, BELOW WATER DEFLECTOR)
BLK/BLU 1
GRN 2
A/C CUT-OUT THERMAL SWITCH (IN COOLANT FLANGE ON REAR OF CYLINDER HEAD, FORWARD OF ECT SENSOR)
WHT
GRN/WHT 61
BLU/RED 40
GRN 41
T121
MOTRONIC ENGINE CONTROL MODULE (ECM) (BELOW LEFT SIDE OF DASH PANEL COVER)

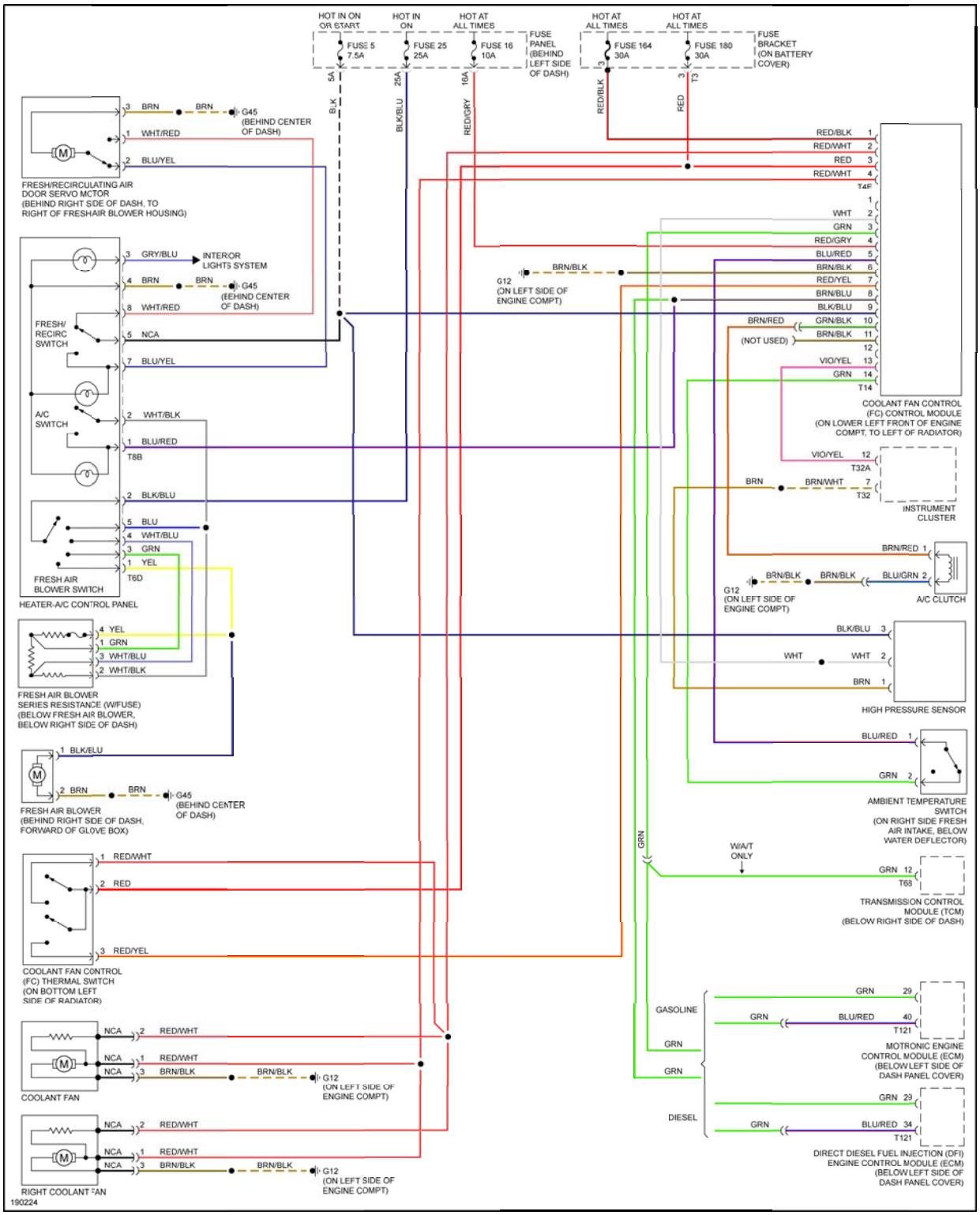
HOT IN ON OR START
HOT IN ON
HOT AT ALL TIMES
FUSE 5 7.5A
FUSE 25 25A
FUSE 16 10A
FUSE PANEL (BEHIND LEFT SIDE OF DASH)
HOT AT ALL TIMES
HOT AT ALL TIMES
FUSE 164 30A
FUSE 180 30A
FUSE BRACKET (ON BATTERY COVER)
5A BLK
25A BLK/BLU
16A RED/GRY
3 RED/BLK
3 T3 RED
FRESH/RECIRCULATING AIR DOOR SERVO MOTOR (BEHIND RIGHT SIDE OF DASH, TO RIGHT OF FRESHAIR BLOWER HOUSING)
3 BRN
BRN
G45 (BEHIND CENTER OF DASH)
1 WHT/RED
2 BLU/YEL
3 GRY/BLU
INTERIOR LIGHTS SYSTEM
4 BRN
BRN
G45 (BEHIND CENTER OF DASH)
8 WHT/RED
FRESH/ RECIRC SWITCH
5 NCA
7 BLU/YEL
A/C SWITCH
2 WHT/BLK
1 BLU/RED
T8B
2 BLK/BLU
5 BLU
4 WHT/BLU
3 GRN
1 YEL
T6D
FRESH AIR BLOWER SWITCH
HEATER-A/C CONTROL PANEL
4 YEL
1 GRN
3 WHT/BLU
2 WHT/BLK
FRESH AIR BLOWER SERIES RESISTANCE (W/FUSE) (BELOW FRESH AIR BLOWER, BELOW RIGHT SIDE OF DASH)
1 BLK/BLU
2 BRN
BRN
G45 (BEHIND CENTER OF DASH)
FRESH AIR BLOWER (BEHIND RIGHT SIDE OF DASH, FORWARD OF GLOVE BOX)
1 RED/WHT
2 RED
3 RED/YEL
COOLANT FAN CONTROL (FC) THERMAL SWITCH (ON BOTTOM LEFT SIDE OF RADIATOR)
NCA 2 RED/WHT
NCA 1 RED/WHT
NCA 3 BRN/BLK
BRN/BLK
G12 (ON LEFT SIDE OF ENGINE COMPT)
COOLANT FAN
NCA 2 RED/WHT
NCA 1 RED/WHT
NCA 3 BRN/BLK
BRN/BLK
G12 (ON LEFT SIDE OF ENGINE COMPT)
RIGHT COOLANT FAN
190224
RED/BLK 1
RED/WHT 2
RED 3
RED/WHT 4
T4F
1
WHT 2
GRN 3
RED/GRY 4
BLU/RED 5
BRN/BLK 6
RED/YEL 7
BRN/BLU 8
BLK/BLU 9
BRN/RED
GRN/BLK 10
(NOT USED)
BRN/BLK 11
12
VIO/YEL 13
GRN 14
T14
COOLANT FAN CONTROL (FC) CONTROL MODULE (ON LOWER LEFT FRONT OF ENGINE COMPT, TO LEFT OF RADIATOR)
BRN/BLK
G12 (ON LEFT SIDE OF ENGINE COMPT)
VIO/YEL 12
T32A
BRN
BRN/WHT 7
T32
INSTRUMENT CLUSTER
BRN/RED 1
BRN/BLK
BRN/BLK
BLU/GRN 2
G12 (ON LEFT SIDE OF ENGINE COMPT)
A/C CLUTCH
BLK/BLU 3
WHT
WHT 2
BRN 1
HIGH PRESSURE SENSOR
BLU/RED 1
GRN 2
AMBIENT TEMPERATURE SWITCH (ON RIGHT SIDE FRESH AIR INTAKE, BELOW WATER DEFLECTOR)
GRN
W/A/T ONLY
GRN 12
T65
TRANSMISSION CONTROL MODULE (TCM) (BELOW RIGHT SIDE OF DASH)
GASOLINE
GRN 29
GRN
BLU/RED 40
T121
GRN
GRN
MOTRONIC ENGINE CONTROL MODULE (ECM) (BELOW LEFT SIDE OF DASH PANEL COVER)
DIESEL
GRN 29
GRN
BLU/RED 34
T121
DIRECT DIESEL FUEL INJECTION (DFI) ENGINE CONTROL MODULE (ECM) (BELOW LEFT SIDE OF DASH PANEL COVER)

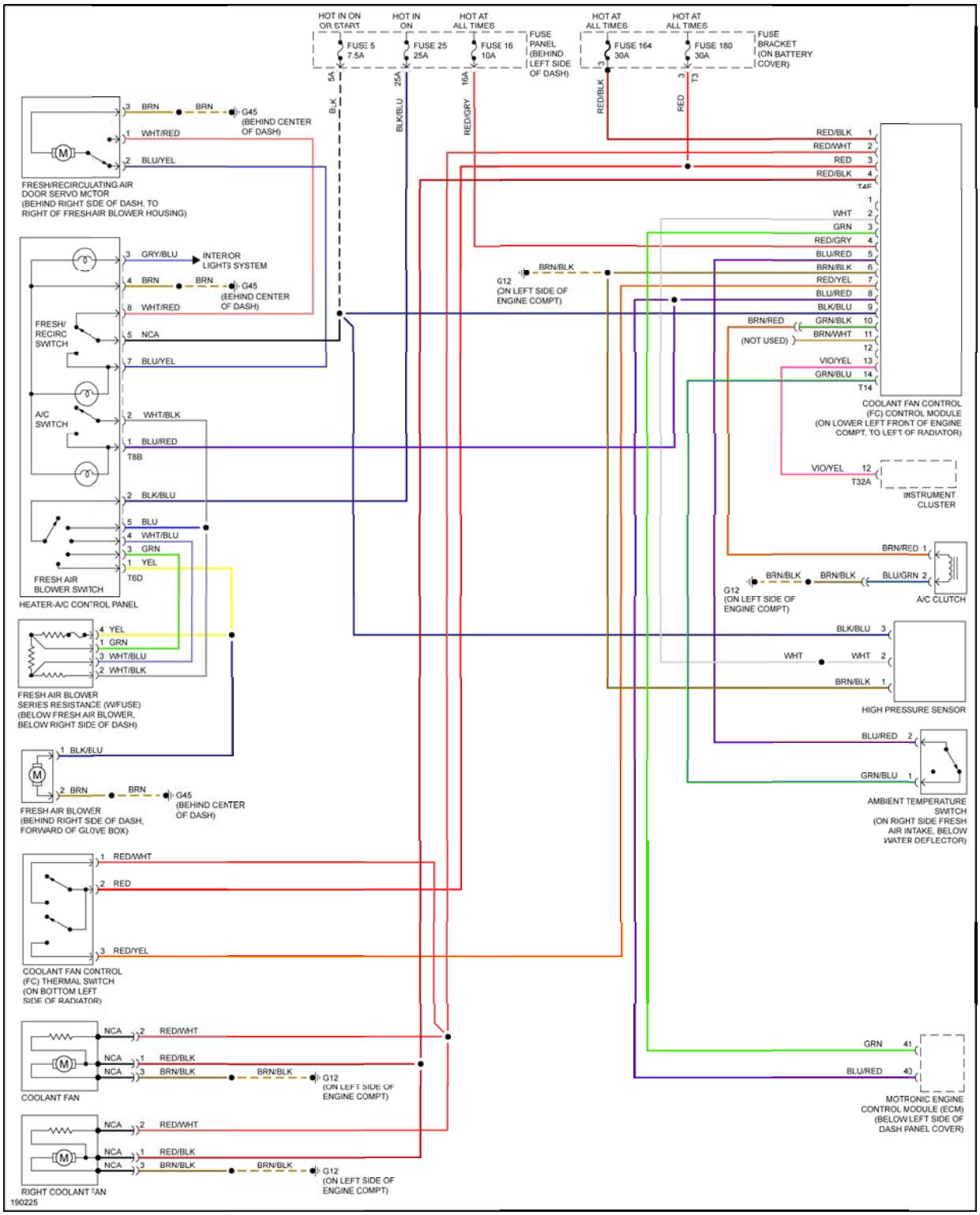
HOT IN ON OR START
HOT IN ON
HOT AT ALL TIMES
FUSE 5 7.5A
FUSE 25 25A
FUSE 16 10A
FUSE PANEL (BEHIND LEFT SIDE OF DASH)
HOT AT ALL TIMES
HOT AT ALL TIMES
FUSE 164 30A
FUSE 180 30A
FUSE BRACKET (ON BATTERY COVER)
5A BLK
25A BLK/BLU
16A RED/GRY
3 RED/BLK
3 T3 RED
FRESH/RECIRCULATING AIR DOOR SERVO MOTOR (BEHIND RIGHT SIDE OF DASH, TO RIGHT OF FRESHAIR BLOWER HOUSING)
3 BRN
BRN
G45 (BEHIND CENTER OF DASH)
1 WHT/RED
2 BLU/YEL
3 GRY/BLU
INTERIOR LIGHTS SYSTEM
4 BRN
BRN
G45 (BEHIND CENTER OF DASH)
8 WHT/RED
FRESH/ RECIRC SWITCH
5 NCA
7 BLU/YEL
A/C SWITCH
2 WHT/BLK
1 BLU/RED
T8B
2 BLK/BLU
5 BLU
4 WHT/BLU
3 GRN
1 YEL
T6D
FRESH AIR BLOWER SWITCH
HEATER-A/C CONTROL PANEL
4 YEL
1 GRN
3 WHT/BLU
2 WHT/BLK
FRESH AIR BLOWER SERIES RESISTANCE (W/FUSE) (BELOW FRESH AIR BLOWER, BELOW RIGHT SIDE OF DASH)
1 BLK/BLU
2 BRN
BRN
G45 (BEHIND CENTER OF DASH)
FRESH AIR BLOWER (BEHIND RIGHT SIDE OF DASH, FORWARD OF GLOVE BOX)
1 RED/WHT
2 RED
3 RED/YEL
COOLANT FAN CONTROL (FC) THERMAL SWITCH (ON BOTTOM LEFT SIDE OF RADIATOR)
NCA 2 RED/WHT
NCA 1 RED/BLK
NCA 3 BRN/BLK
BRN/BLK
G12 (ON LEFT SIDE OF ENGINE COMPT)
COOLANT FAN
NCA 2 RED/WHT
NCA 1 RED/BLK
NCA 3 BRN/BLK
BRN/BLK
G12 (ON LEFT SIDE OF ENGINE COMPT)
RIGHT COOLANT FAN
190225
BRN/BLK
G12 (ON LEFT SIDE OF ENGINE COMPT)
RED/BLK 1
RED/WHT 2
RED 3
RED/BLK 4
T4F
1
WHT 2
GRN 3
RED/GRY 4
BLU/RED 5
BRN/BLK 6
RED/YEL 7
BLU/RED 8
BLK/BLU 9
BRN/RED
GRN/BLK 10
BRN/WHT 11
(NOT USED)
12
VIO/YEL 13
GRN/BLU 14
T14
COOLANT FAN CONTROL (FC) CONTROL MODULE (ON LOWER LEFT FRONT OF ENGINE COMPT, TO LEFT OF RADIATOR)
VIO/YEL 12
T32A
INSTRUMENT CLUSTER
BRN/RED 1
BRN/BLK
BRN/BLK
BLU/GRN 2
G12 (ON LEFT SIDE OF ENGINE COMPT)
A/C CLUTCH
BLK/BLU 3
WHT
WHT 2
BRN/BLK 1
HIGH PRESSURE SENSOR
BLU/RED 2
GRN/BLU 1
AMBIENT TEMPERATURE SWITCH (ON RIGHT SIDE FRESH AIR INTAKE, BELOW WATER DEFLECTOR)
GRN 41
BLU/RED 40
MOTRONIC ENGINE CONTROL MODULE (ECM) (BELOW LEFT SIDE OF DASH PANEL COVER)

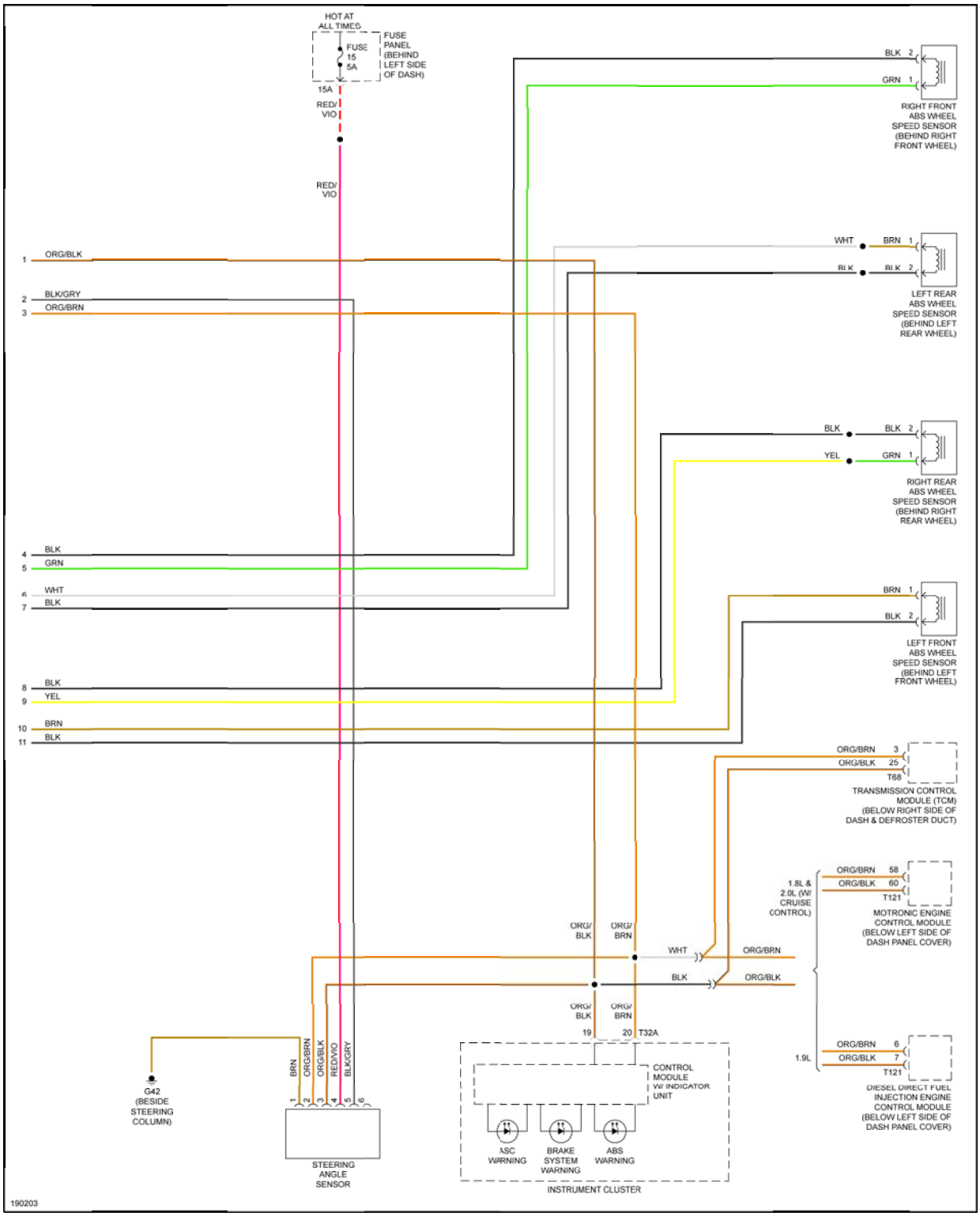
HOT AT ALL TIMES
FUSE 15 5A
FUSE PANEL (BEHIND LEFT SIDE OF DASH)
15A
RED/VIO
RED/VIO
BLK 2
GRN 1
RIGHT FRONT ABS WHEEL SPEED SENSOR (BEHIND RIGHT FRONT WHEEL)
1 ORG/BLK
2 BLK/GRY
3 ORG/BRN
WHT
BRN 1
BLK
BLK 2
LEFT REAR ABS WHEEL SPEED SENSOR (BEHIND LEFT REAR WHEEL)
BLK
BLK 2
YEL
GRN 1
RIGHT REAR ABS WHEEL SPEED SENSOR (BEHIND RIGHT REAR WHEEL)
4 BLK
5 GRN
6 WHT
7 BLK
BRN 1
BLK 2
LEFT FRONT ABS WHEEL SPEED SENSOR (BEHIND LEFT FRONT WHEEL)
8 BLK
9 YEL
10 BRN
11 BLK
ORG/BRN 3
ORG/BLK 25
T68
TRANSMISSION CONTROL MODULE (TCM) (BELOW RIGHT SIDE OF DASH & DEFROSTER DUCT)
1.8L & 2.0L (W/ CRUISE CONTROL)
ORG/BRN 58
ORG/BLK 60
T121
MOTRONIC ENGINE CONTROL MODULE (BELOW LEFT SIDE OF DASH PANEL COVER)
ORG/ BLK
ORG/ BRN
WHT
ORG/BRN
BLK
ORG/BLK
ORG/ BLK
ORG/ BRN
19
20
T32A
1.9L
ORG/BRN 6
ORG/BLK 7
T121
DIESEL DIRECT FUEL INJECTION ENGINE CONTROL MODULE (BELOW LEFT SIDE OF DASH PANEL COVER)
CONTROL MODULE W/ INDICATOR UNIT
ASC WARNING
BRAKE SYSTEM WARNING
ABS WARNING
INSTRUMENT CLUSTER
G42 (BESIDE STEERING COLUMN)
BRN
ORG/BRN
ORG/BLK
RED/VIO
BLK/GRY
1
2
3
4
5
6
STEERING ANGLE SENSOR
190203

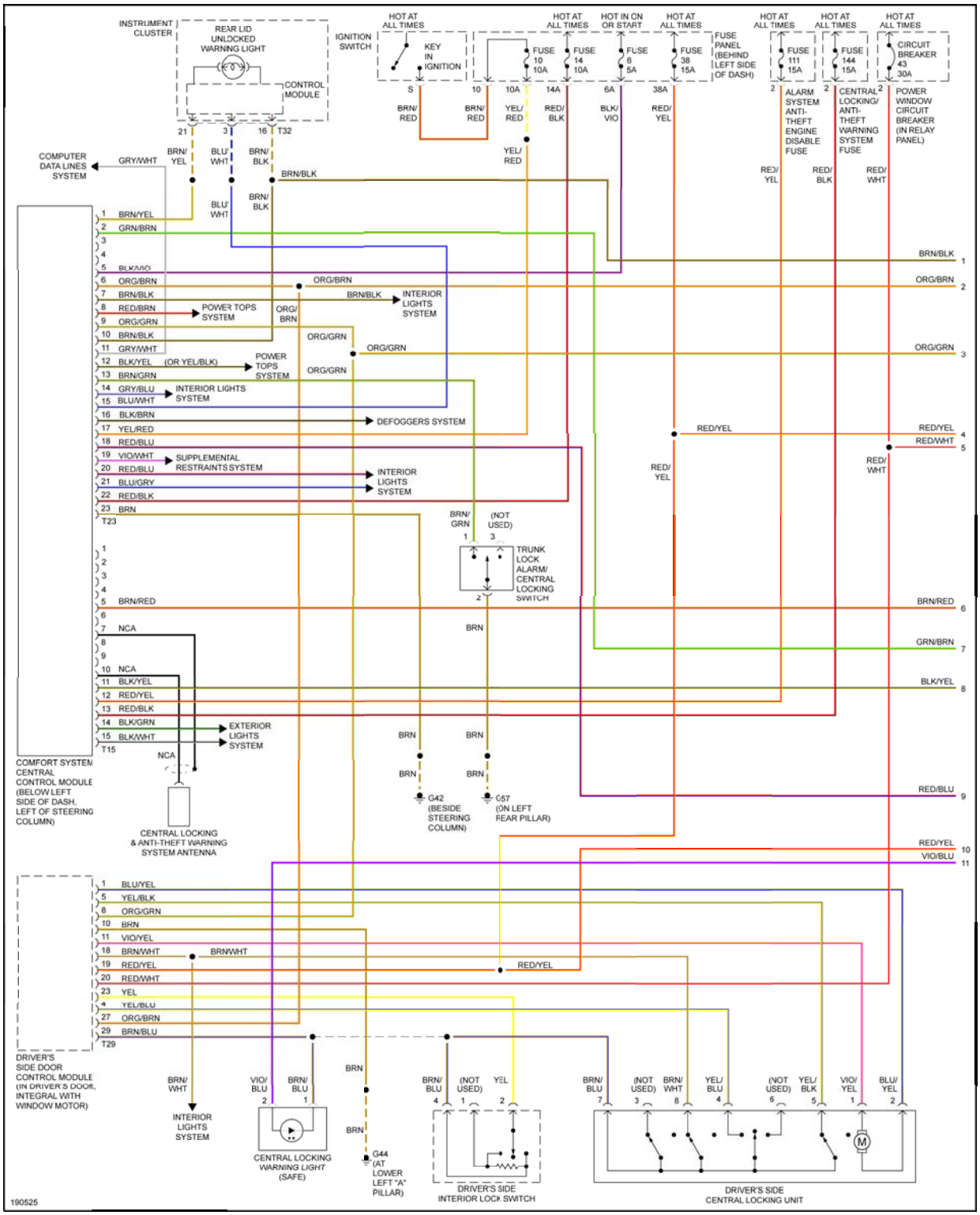
INSTRUMENT CLUSTER
REAR LID UNLOCKED WARNING LIGHT
CONTROL MODULE
21
3
16
T32
IGNITION SWITCH
HOT AT ALL TIMES
KEY IN IGNITION
S
BRN/ RED
HOT AT ALL TIMES
FUSE 10 10A
10
BRN/ RED
FUSE 14 10A
10A
YEL/ RED
HOT IN ON OR START
FUSE 6 5A
14A
RED/ BLK
HOT AT ALL TIMES
FUSE 38 15A
6A
BLK/ VIO
FUSE PANEL (BEHIND LEFT SIDE OF DASH)
38A
RED/ YEL
HOT AT ALL TIMES
FUSE 111 15A
2
ALARM SYSTEM ANTI-THEFT ENGINE DISABLE FUSE
HOT AT ALL TIMES
FUSE 144 15A
2
CENTRAL LOCKING/ ANTI-THEFT WARNING SYSTEM FUSE
HOT AT ALL TIMES
CIRCUIT BREAKER 43 30A
2
POWER WINDOW CIRCUIT BREAKER (IN RELAY PANEL)
COMPUTER DATA LINES SYSTEM
GRY/WHT
BRN/ YEL
BLU/ WHT
BRN/ BLK
BRN/BLK
YEL/ RED
RED/ YEL
RED/ BLK
RED/ WHT
BLU/ WHT
BRN/ BLK
1 BRN/YEL
2 GRN/BRN
3
4
5 BLK/VIO
6 ORG/BRN
7 BRN/BLK
8 RED/BRN
9 ORG/GRN
10 BRN/BLK
11 GRY/WHT
12 BLK/YEL (OR YEL/BLK)
13 BRN/GRN
14 GRY/BLU
15 BLU/WHT
16 BLK/BRN
17 YEL/RED
18 RED/BLU
19 VIO/WHT
20 RED/BLU
21 BLU/GRY
22 RED/BLK
23 BRN
T23
POWER TOPS SYSTEM
INTERIOR LIGHTS SYSTEM
ORG/ BRN
ORG/GRN
POWER TOPS SYSTEM
INTERIOR LIGHTS SYSTEM
DEFOGGERS SYSTEM
SUPPLEMENTAL RESTRAINTS SYSTEM
INTERIOR LIGHTS SYSTEM
BRN/BLK 1
ORG/BRN 2
ORG/GRN 3
RED/YEL 4
RED/WHT 5
BRN/ GRN
(NOT USED)
TRUNK LOCK ALARM/ CENTRAL LOCKING SWITCH
1 2 3 4 5 BRN/RED
6
7 NCA
8 9 10 NCA
11 BLK/YEL
12 RED/YEL
13 RED/BLK
14 BLK/GRN
15 BLK/WHT
T15
EXTERIOR LIGHTS SYSTEM
BRN
BRN/RED 6
GRN/BRN 7
BLK/YEL 8
RED/BLU 9
RED/YEL 10
VIO/BLU 11
COMFORT SYSTEM CENTRAL CONTROL MODULE (BELOW LEFT SIDE OF DASH, LEFT OF STEERING COLUMN)
NCA
CENTRAL LOCKING & ANTI-THEFT WARNING SYSTEM ANTENNA
G42 (BESIDE STEERING COLUMN)
C57 (ON LEFT REAR PILLAR)
1 BLU/YEL
5 YEL/BLK
8 ORG/GRN
10 BRN
11 VIO/YEL
18 BRN/WHT
19 RED/YEL
20 RED/WHT
23 YEL
4 YEL/BLU
27 ORG/BRN
29 BRN/BLU
T29
DRIVER'S SIDE DOOR CONTROL MODULE (IN DRIVER'S DOOR, INTEGRAL WITH WINDOW MOTOR)
BRN/ WHT
INTERIOR LIGHTS SYSTEM
VIO/ BLU
BRN/ BLU
CENTRAL LOCKING WARNING LIGHT (SAFE)
G44 (AT LOWER LEFT "A" PILLAR)
BRN/ BLU
(NOT USED)
YEL
DRIVER'S SIDE INTERIOR LOCK SWITCH
BRN/ BLU
(NOT USED)
BRN/ WHT
YEL/ BLU
(NOT USED)
YEL/ BLK
VIO/ YEL
BLU/ YEL
DRIVER'S SIDE CENTRAL LOCKING UNIT
190525

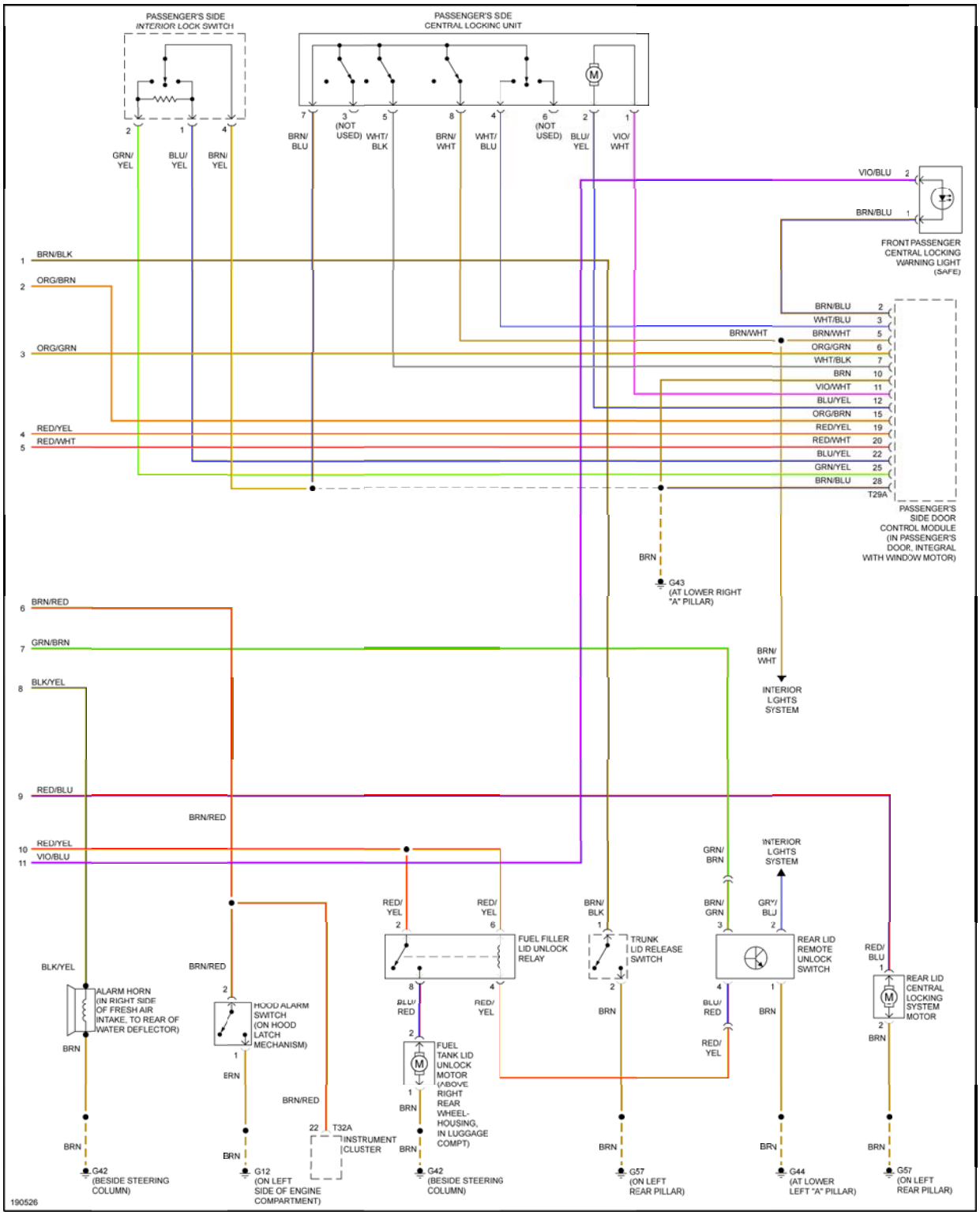
PASSENGER'S SIDE INTERIOR LOCK SWITCH
PASSENGER'S SDE CENTRAL LOCKING UNIT
GRN/YEL
BLU/YEL
BRN/YEL
BRN/BLU
(NOT USED)
WHT/BLK
BRN/WHT
WHT/BLU
(NOT USED)
BLU/YEL
VIO/WHT
VIO/BLU
BRN/BLU
FRONT PASSENGER CENTRAL LOCKING WARNING LIGHT (SAFE)
BRN/BLK
ORG/BRN
ORG/GRN
RED/YEL
RED/WHT
BRN/BLU 2
WHT/BLU 3
BRN/WHT 5
ORG/GRN 6
WHT/BLK 7
BRN 10
VIO/WHT 11
BLU/YEL 12
ORG/BRN 15
RED/YEL 19
RED/WHT 20
BLU/YEL 22
GRN/YEL 25
BRN/BLU 28
T29A
PASSENGER'S SIDE DOOR CONTROL MODULE (IN PASSENGER'S DOOR, INTEGRAL WITH WINDOW MOTOR)
BRN
G43 (AT LOWER RIGHT "A" PILLAR)
BRN/WHT
INTERIOR LGHTS SYSTEM
BRN/RED
GRN/BRN
BLK/YEL
RED/BLU
RED/YEL
VIO/BLU
GRN/BRN
INTERIOR LGHTS SYSTEM
RED/YEL
RED/YEL
BRN/BLK
BRN/GRN
GRY/BLU
RED/BLU
FUEL FILLER LID UNLOCK RELAY
TRUNK LID RELEASE SWITCH
REAR LID REMOTE UNLOCK SWITCH
REAR LID CENTRAL LOCKING SYSTEM MOTOR
BLK/YEL
BRN/RED
ALARM HORN (IN RIGHT SIDE OF FRESH AIR INTAKE, TO REAR OF WATER DEFLECTOR)
HOOD ALARM SWITCH (ON HOOD LATCH MECHANISM)
BLU/RED
RED/YEL
BRN
FUEL TANK LID UNLOCK MOTOR (ABOVE RIGHT REAR WHEEL-HOUSING, IN LUGGAGE COMPT)
BRN/RED
T32A
INSTRUMENT CLUSTER
G42 (BESIDE STEERING COLUMN)
G12 (ON LEFT SIDE OF ENGINE COMPARTMENT)
G42 (BESIDE STEERING COLUMN)
G57 (ON LEFT REAR PILLAR)
G44 (AT LOWER LEFT "A" PILLAR)
G57 (ON LEFT REAR PILLAR)
190526

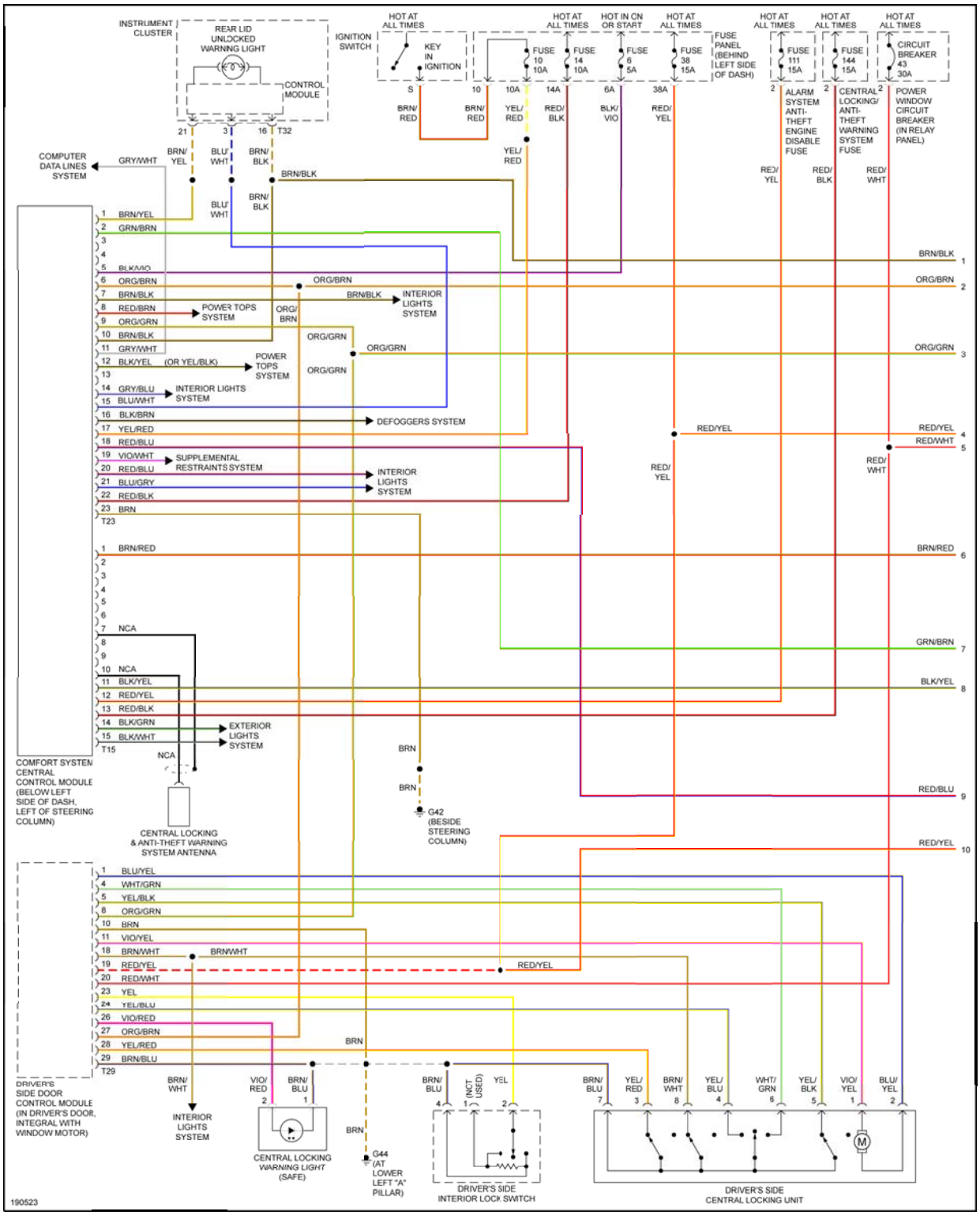
INSTRUMENT CLUSTER
REAR LID UNLOCKED WARNING LIGHT
CONTROL MODULE
21
3
16
T32
IGNITION SWITCH
KEY IN IGNITION
HOT AT ALL TIMES
HOT IN ON OR START
FUSE PANEL (BEHIND LEFT SIDE OF DASH)
FUSE 10 10A
FUSE 14 10A
FUSE 6 5A
FUSE 38 15A
FUSE 111 15A
FUSE 144 15A
CIRCUIT BREAKER 43 30A
ALARM SYSTEM ANTI-THEFT ENGINE DISABLE FUSE
CENTRAL LOCKING/ ANTI-THEFT WARNING SYSTEM FUSE
POWER WINDOW CIRCUIT BREAKER (IN RELAY PANEL)
COMPUTER DATA LINES SYSTEM
GRY/WHT
BRN/YEL
BLU/WHT
BRN/BLK
BRN/BLK
YEL/RED
RED/YEL
RED/BLK
RED/WHT
BLU/WHT
BRN/BLK
1 BRN/YEL
2 GRN/BRN
3
4
5 BLK/VIO
6 ORG/BRN
7 BRN/BLK
8 RED/BRN
9 ORG/GRN
10 BRN/BLK
11 GRY/WHT
12 BLK/YEL (OR YEL/BLK)
13
14 GRY/BLU
15 BLU/WHT
16 BLK/BRN
17 YEL/RED
18 RED/BLU
19 VIO/WHT
20 RED/BLU
21 BLU/GRY
22 RED/BLK
23 BRN
T23
POWER TOPS SYSTEM
INTERIOR LIGHTS SYSTEM
ORG/BRN
ORG/GRN
DEFOGGERS SYSTEM
SUPPLEMENTAL RESTRAINTS SYSTEM
INTERIOR LIGHTS SYSTEM
RED/YEL
RED/WHT
BRN/BLK 1
ORG/BRN 2
ORG/GRN 3
RED/YEL 4
RED/WHT 5
1 BRN/RED
2
3
4
5
6
7 NCA
8
9
10 NCA
11 BLK/YEL
12 RED/YEL
13 RED/BLK
14 BLK/GRN
15 BLK/WHT
T15
EXTERIOR LIGHTS SYSTEM
NCA
BRN
G42 (BESIDE STEERING COLUMN)
COMFORT SYSTEM CENTRAL CONTROL MODULE (BELOW LEFT SIDE OF DASH, LEFT OF STEERING COLUMN)
CENTRAL LOCKING & ANTI-THEFT WARNING SYSTEM ANTENNA
BRN/RED 6
GRN/BRN 7
BLK/YEL 8
RED/BLU 9
RED/YEL 10
1 BLU/YEL
4 WHT/GRN
5 YEL/BLK
8 ORG/GRN
10 BRN
11 VIO/YEL
18 BRN/WHT
19 RED/YEL
20 RED/WHT
23 YEL
24 YEL/BLU
26 VIO/RED
27 ORG/BRN
28 YEL/RED
29 BRN/BLU
T29
BRN/WHT
RED/YEL
DRIVER'S SIDE DOOR CONTROL MODULE (IN DRIVER'S DOOR, INTEGRAL WITH WINDOW MOTOR)
BRN/WHT
INTERIOR LIGHTS SYSTEM
VIO/RED
BRN/BLU
CENTRAL LOCKING WARNING LIGHT (SAFE)
BRN
G44 (AT LOWER LEFT "A" PILLAR)
BRN/BLU
(NOT USED)
YEL
DRIVER'S SIDE INTERIOR LOCK SWITCH
BRN/BLU
YEL/RED
BRN/WHT
YEL/BLU
WHT/GRN
YEL/BLK
VIO/YEL
BLU/YEL
DRIVER'S SIDE CENTRAL LOCKING UNIT
190523

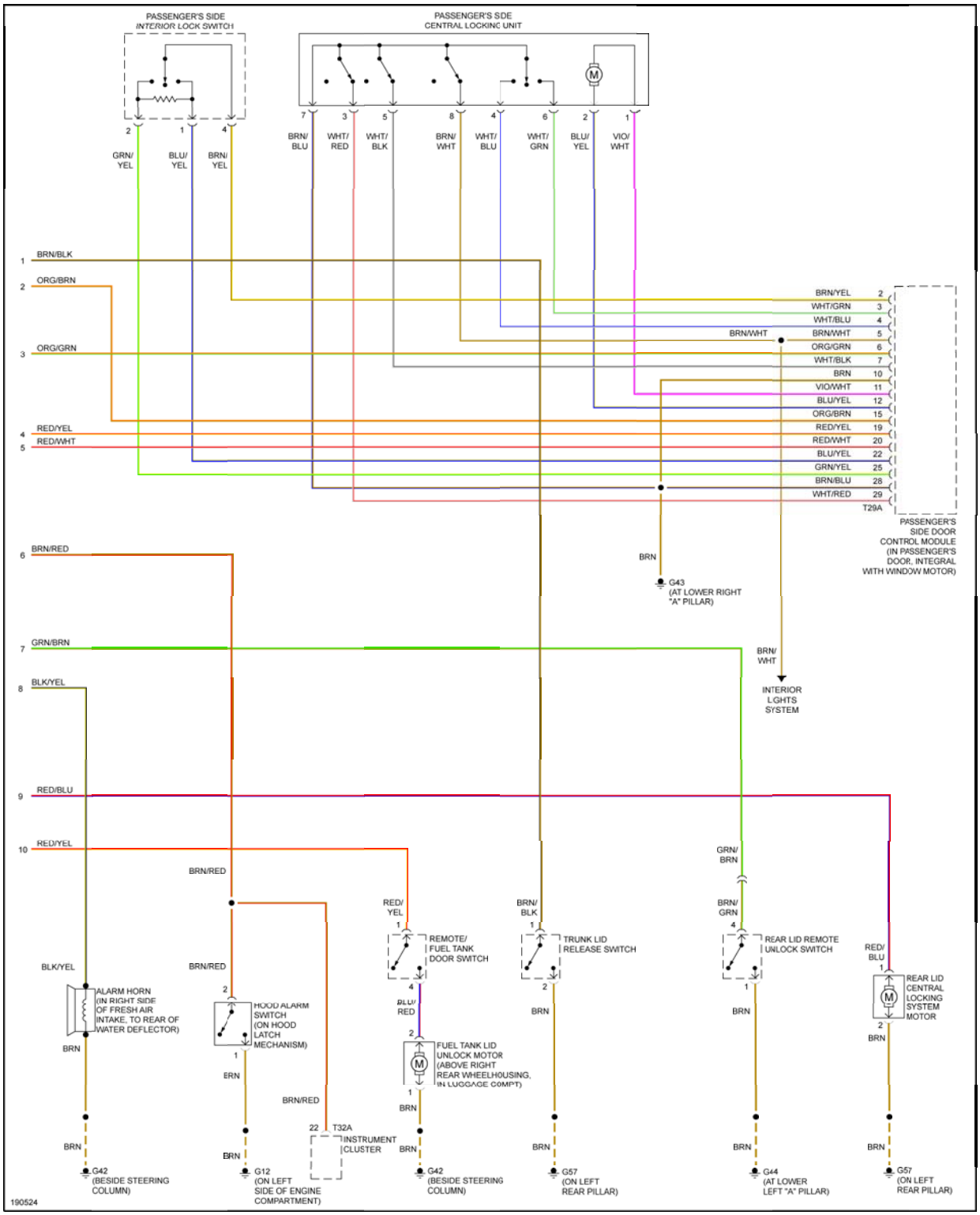
PASSENGER'S SIDE INTERIOR LOCK SWITCH
PASSENGER'S SDE CENTRAL LOCKING UNIT
GRN/YEL
BLU/YEL
BRN/YEL
BRN/BLU
WHT/RED
WHT/BLK
BRN/WHT
WHT/BLU
WHT/GRN
BLU/YEL
VIO/WHT
BRN/BLK
ORG/BRN
ORG/GRN
RED/YEL
RED/WHT
BRN/RED
GRN/BRN
BLK/YEL
RED/BLU
BRN/YEL 2
WHT/GRN 3
WHT/BLU 4
BRN/WHT 5
ORG/GRN 6
WHT/BLK 7
BRN 10
VIO/WHT 11
BLU/YEL 12
ORG/BRN 15
RED/YEL 19
RED/WHT 20
BLU/YEL 22
GRN/YEL 25
BRN/BLU 28
WHT/RED 29
T29A
PASSENGER'S SIDE DOOR CONTROL MODULE (IN PASSENGER'S DOOR, INTEGRAL WITH WINDOW MOTOR)
G43 (AT LOWER RIGHT "A" PILLAR)
INTERIOR LGHTS SYSTEM
ALARM HORN (IN RIGHT SIDE OF FRESH AIR INTAKE, TO REAR OF WATER DEFLECTOR)
HOOD ALARM SWITCH (ON HOOD LATCH MECHANISM)
REMOTE/ FUEL TANK DOOR SWITCH
FUEL TANK LID UNLOCK MOTOR (ABOVE RIGHT REAR WHEELHOUSING, IN LUGGAGE COMPT)
TRUNK LID RELEASE SWITCH
REAR LID REMOTE UNLOCK SWITCH
REAR LID CENTRAL LOCKING SYSTEM MOTOR
T32A
INSTRUMENT CLUSTER
G42 (BESIDE STEERING COLUMN)
G12 (ON LEFT SIDE OF ENGINE COMPARTMENT)
G42 (BESIDE STEERING COLUMN)
G57 (ON LEFT REAR PILLAR)
G44 (AT LOWER LEFT "A" PILLAR)
G57 (ON LEFT REAR PILLAR)
190524

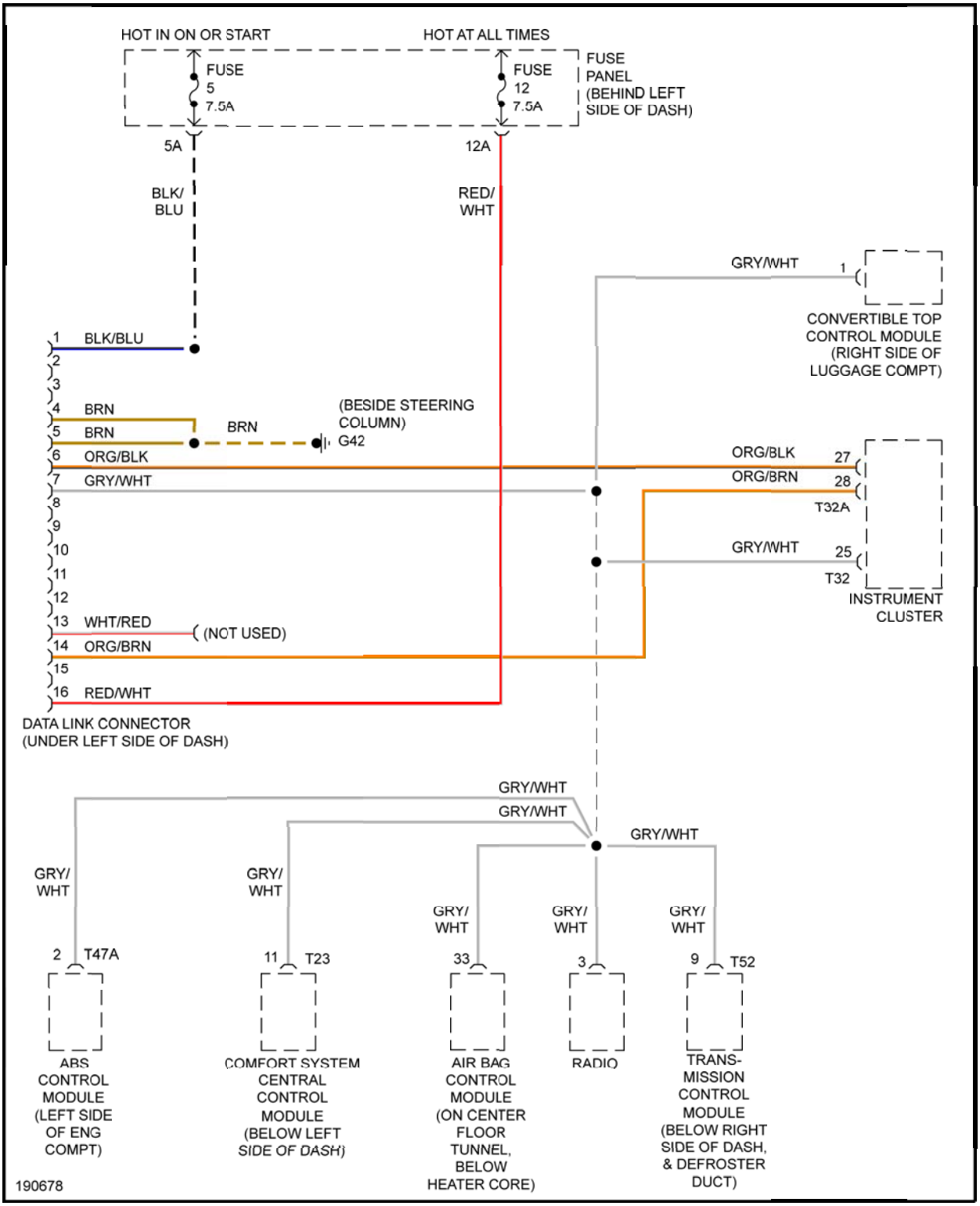
HOT IN ON OR START
HOT AT ALL TIMES
FUSE 5 7.5A
FUSE 12 7.5A
FUSE PANEL (BEHIND LEFT SIDE OF DASH)
5A
12A
BLK/BLU
RED/WHT
GRY/WHT
1
CONVERTIBLE TOP CONTROL MODULE (RIGHT SIDE OF LUGGAGE COMPT)
1 BLK/BLU
2
3
4 BRN
5 BRN
BRN
(BESIDE STEERING COLUMN)
G42
6 ORG/BLK
7 GRY/WHT
ORG/BLK
27
ORG/BRN
28
T32A
8
9
10
GRY/WHT
25
T32
INSTRUMENT CLUSTER
11
12
13 WHT/RED
(NOT USED)
14 ORG/BRN
15
16 RED/WHT
DATA LINK CONNECTOR (UNDER LEFT SIDE OF DASH)
GRY/WHT
GRY/WHT
GRY/WHT
GRY/WHT
GRY/WHT
GRY/WHT
GRY/WHT
2
T47A
11
T23
33
3
9
T52
ABS CONTROL MODULE (LEFT SIDE OF ENG COMPT)
COMFORT SYSTEM CENTRAL CONTROL MODULE (BELOW LEFT SIDE OF DASH)
AIR BAG CONTROL MODULE (ON CENTER FLOOR TUNNEL, BELOW HEATER CORE)
RADIO
TRANS-MISSION CONTROL MODULE (BELOW RIGHT SIDE OF DASH, & DEFROSTER DUCT)
190678

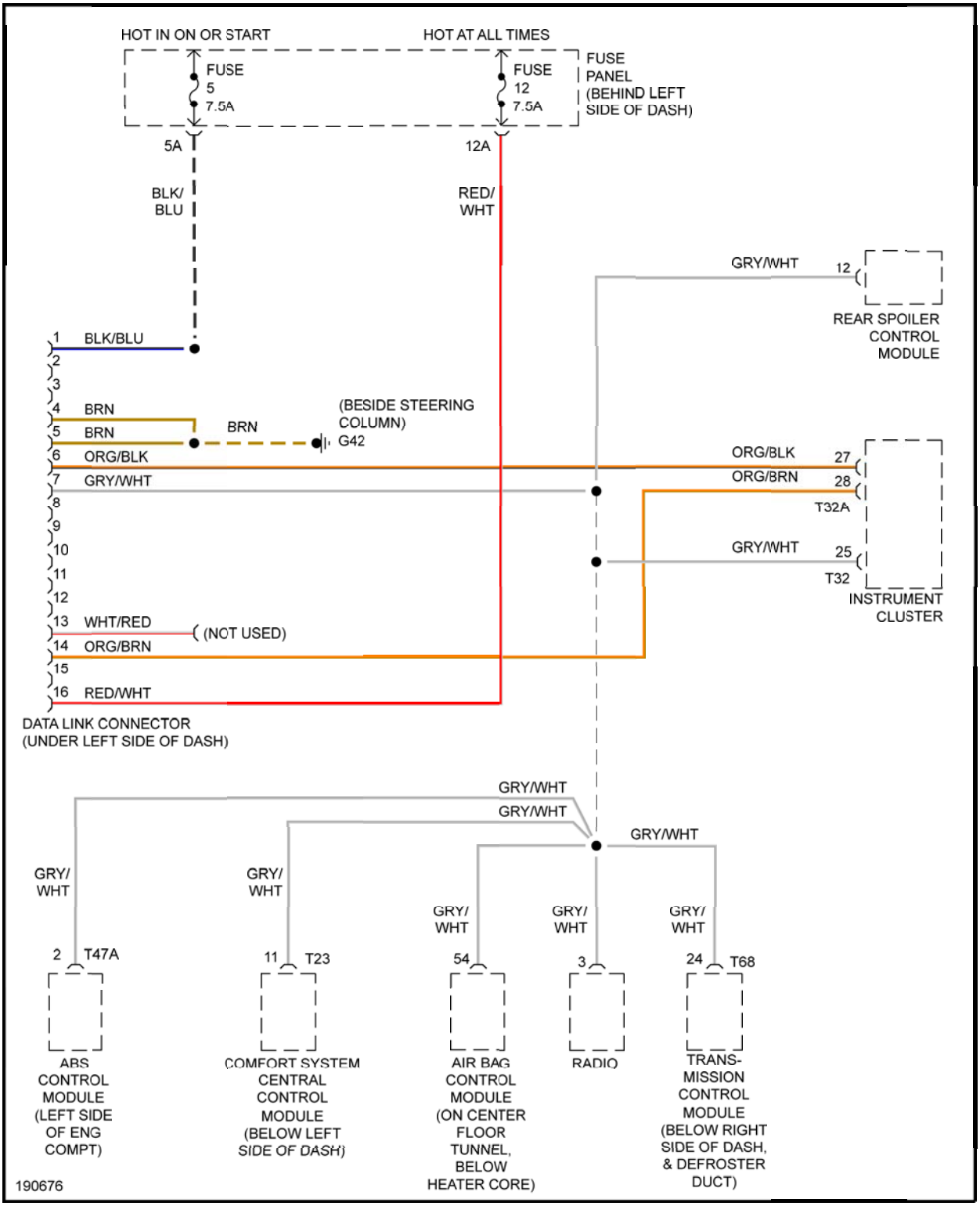
HOT IN ON OR START
HOT AT ALL TIMES
FUSE 5 7.5A
FUSE 12 7.5A
FUSE PANEL (BEHIND LEFT SIDE OF DASH)
5A
12A
BLK/BLU
RED/WHT
GRY/WHT
12
REAR SPOILER CONTROL MODULE
1 BLK/BLU
2
3
4 BRN
5 BRN
BRN
(BESIDE STEERING COLUMN)
G42
6 ORG/BLK
7 GRY/WHT
8
9
10
11
12
13 WHT/RED
(NOT USED)
14 ORG/BRN
15
16 RED/WHT
DATA LINK CONNECTOR (UNDER LEFT SIDE OF DASH)
ORG/BLK
27
ORG/BRN
28
T32A
GRY/WHT
25
T32
INSTRUMENT CLUSTER
GRY/WHT
GRY/WHT
GRY/WHT
GRY/ WHT
GRY/ WHT
GRY/ WHT
GRY/ WHT
GRY/ WHT
2 T47A
11 T23
54
3
24 T68
ABS CONTROL MODULE (LEFT SIDE OF ENG COMPT)
COMFORT SYSTEM CENTRAL CONTROL MODULE (BELOW LEFT SIDE OF DASH)
AIR BAG CONTROL MODULE (ON CENTER FLOOR TUNNEL, BELOW HEATER CORE)
RADIO
TRANS-MISSION CONTROL MODULE (BELOW RIGHT SIDE OF DASH, & DEFROSTER DUCT)
190676

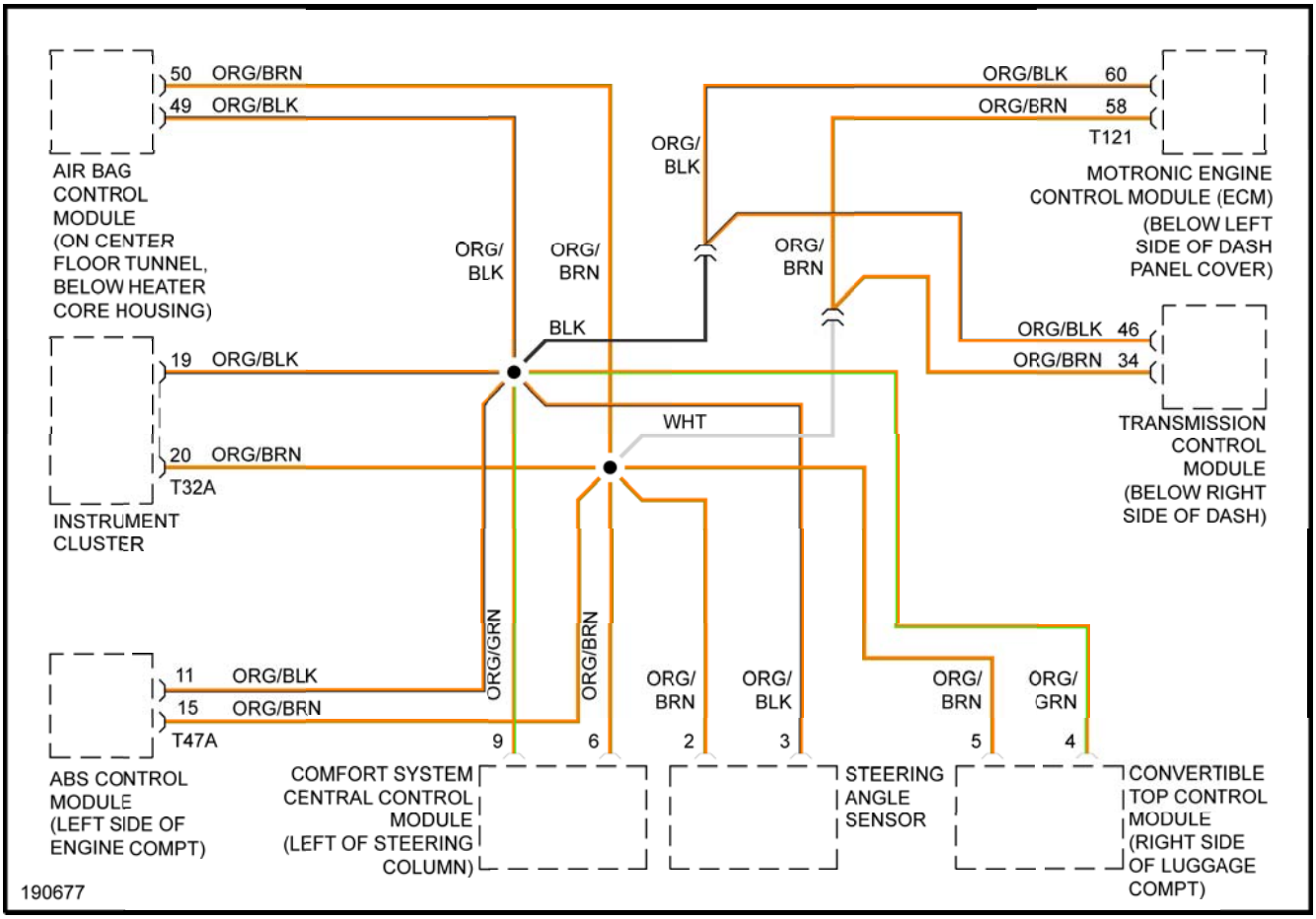
50 ORG/BRN
49 ORG/BLK
AIR BAG CONTROL MODULE (ON CENTER FLOOR TUNNEL, BELOW HEATER CORE HOUSING)
ORG/BLK
ORG/BRN
BLK
ORG/BLK
ORG/BRN
ORG/BLK 60
ORG/BRN 58
T121
MOTRONIC ENGINE CONTROL MODULE (ECM) (BELOW LEFT SIDE OF DASH PANEL COVER)
ORG/BLK 46
ORG/BRN 34
TRANSMISSION CONTROL MODULE (BELOW RIGHT SIDE OF DASH)
19 ORG/BLK
20 ORG/BRN
T32A
INSTRUMENT CLUSTER
WHT
ORG/GRN
ORG/BRN
11 ORG/BLK
15 ORG/BRN
T47A
ABS CONTROL MODULE (LEFT SIDE OF ENGINE COMPT)
9
6
ORG/BRN
2
ORG/BLK
3
ORG/BRN
5
ORG/GRN
4
COMFORT SYSTEM CENTRAL CONTROL MODULE (LEFT OF STEERING COLUMN)
STEERING ANGLE SENSOR
CONVERTIBLE TOP CONTROL MODULE (RIGHT SIDE OF LUGGAGE COMPT)
190677

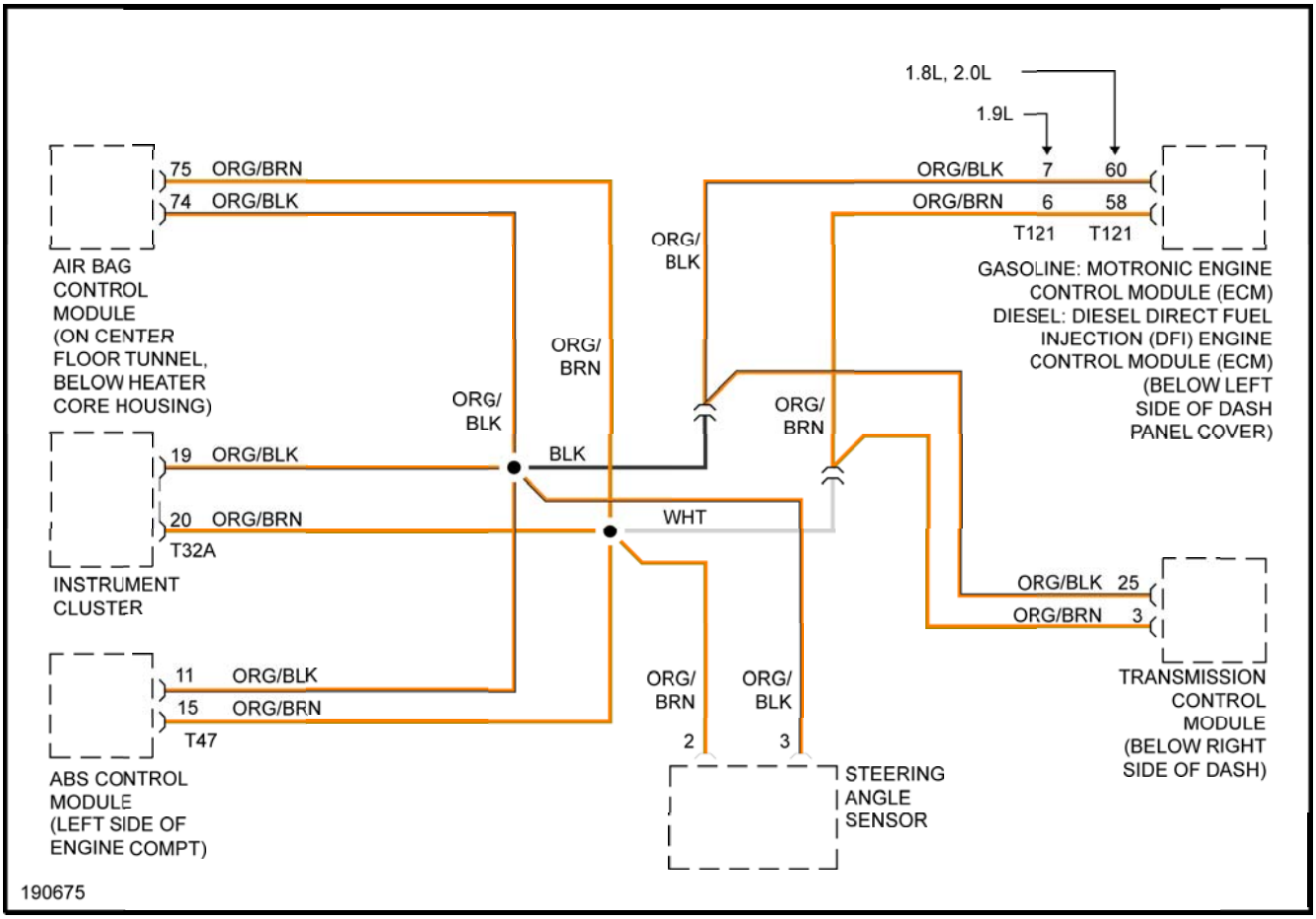
1.8L, 2.0L
1.9L
75 ORG/BRN
74 ORG/BLK
AIR BAG CONTROL MODULE (ON CENTER FLOOR TUNNEL, BELOW HEATER CORE HOUSING)
ORG/BLK
ORG/BRN
ORG/BLK
BLK
19 ORG/BLK
20 ORG/BRN
T32A
INSTRUMENT CLUSTER
WHT
11 ORG/BLK
15 ORG/BRN
T47
ABS CONTROL MODULE (LEFT SIDE OF ENGINE COMPT)
ORG/BRN
2
ORG/BLK
3
STEERING ANGLE SENSOR
ORG/BLK 7 60
ORG/BRN 6 58
T121 T121
GASOLINE: MOTRONIC ENGINE CONTROL MODULE (ECM)
DIESEL: DIESEL DIRECT FUEL INJECTION (DFI) ENGINE CONTROL MODULE (ECM)
(BELOW LEFT SIDE OF DASH PANEL COVER)
ORG/BRN
ORG/BLK 25
ORG/BRN 3
TRANSMISSION CONTROL MODULE (BELOW RIGHT SIDE OF DASH)
190675

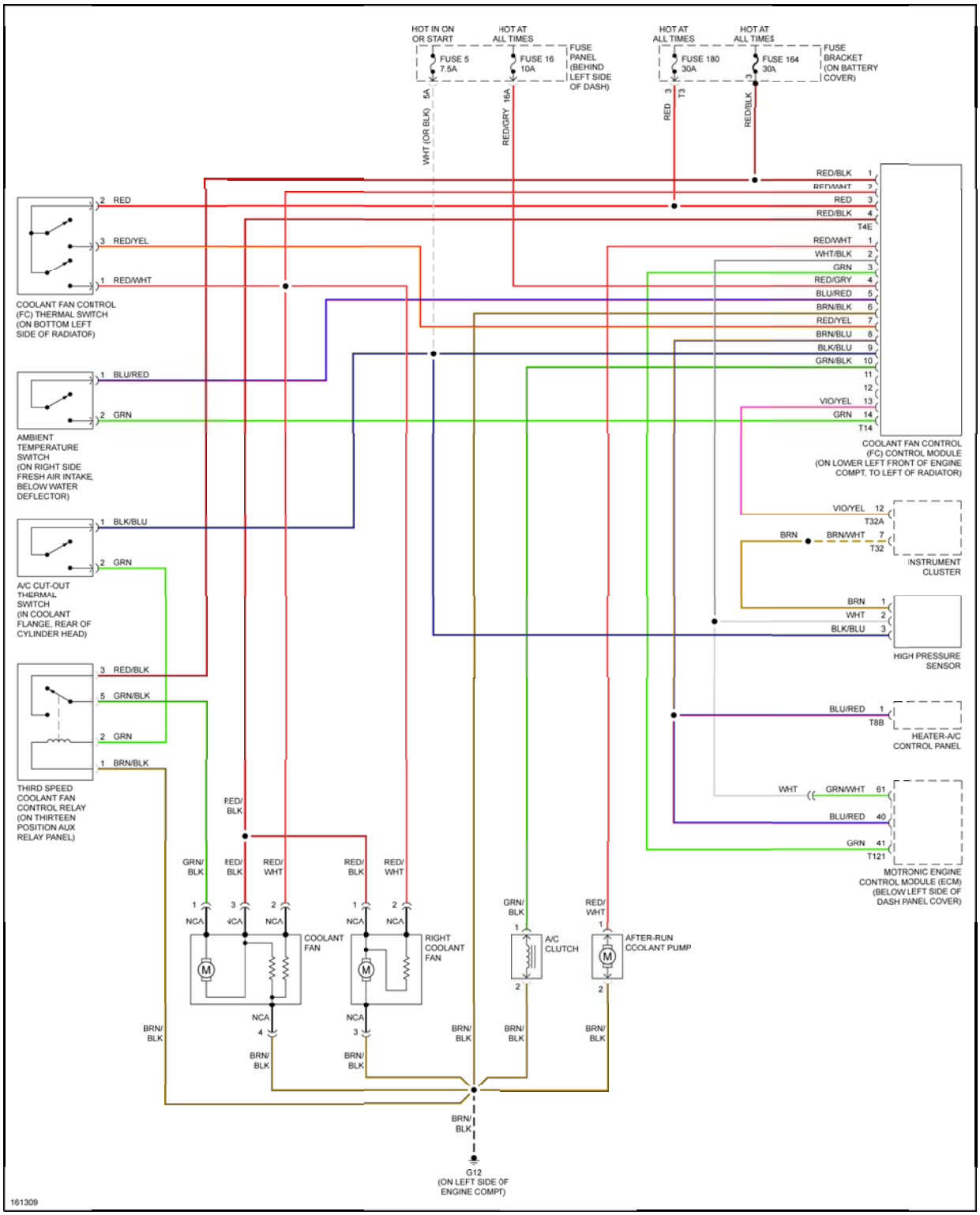
HOT IN ON OR START
HOT AT ALL TIMES
FUSE 5 7.5A
FUSE 16 10A
FUSE PANEL (BEHIND LEFT SIDE OF DASH)
HOT AT ALL TIMES
HOT AT ALL TIMES
FUSE 180 30A
FUSE 164 30A
FUSE BRACKET (ON BATTERY COVER)
WHT (OR BLK) 5A
RED/GRY 16A
RED 3 T3
RED/BLK
COOLANT FAN CONTROL (FC) THERMAL SWITCH (ON BOTTOM LEFT SIDE OF RADIATOR)
AMBIENT TEMPERATURE SWITCH (ON RIGHT SIDE FRESH AIR INTAKE, BELOW WATER DEFLECTOR)
A/C CUT-OUT THERMAL SWITCH (IN COOLANT FLANGE, REAR OF CYLINDER HEAD)
THIRD SPEED COOLANT FAN CONTROL RELAY (ON THIRTEEN POSITION AUX RELAY PANEL)
COOLANT FAN CONTROL (FC) CONTROL MODULE (ON LOWER LEFT FRONT OF ENGINE COMPT, TO LEFT OF RADIATOR)
T4E
T14
INSTRUMENT CLUSTER
T32A
T32
HIGH PRESSURE SENSOR
HEATER-A/C CONTROL PANEL
T8B
MOTRONIC ENGINE CONTROL MODULE (ECM) (BELOW LEFT SIDE OF DASH PANEL COVER)
T121
COOLANT FAN
RIGHT COOLANT FAN
A/C CLUTCH
AFTER-RUN COOLANT PUMP
G12 (ON LEFT SIDE OF ENGINE COMPT)
161309

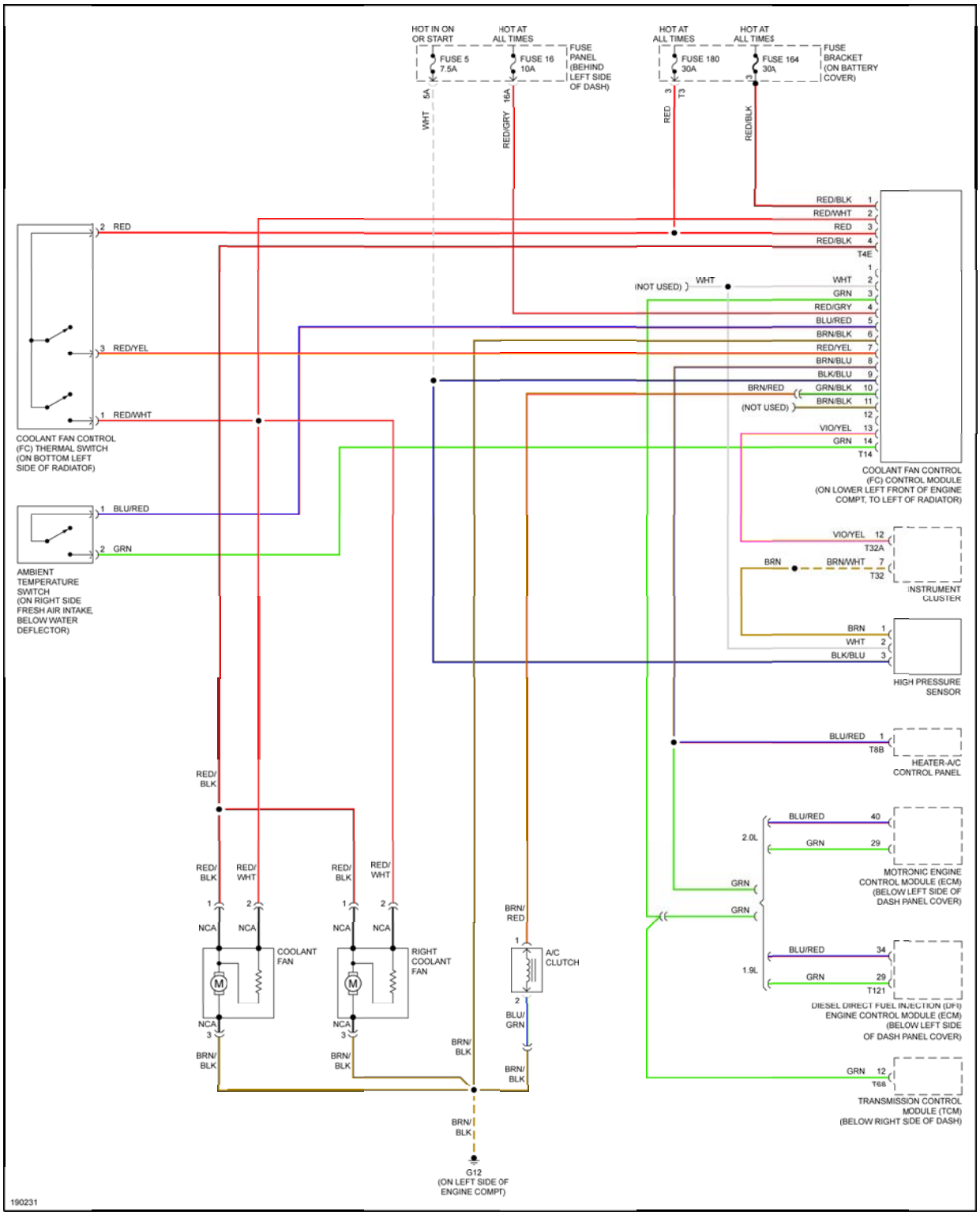
HOT IN ON OR START
HOT AT ALL TIMES
FUSE 5 7.5A
FUSE 16 10A
FUSE PANEL (BEHIND LEFT SIDE OF DASH)
HOT AT ALL TIMES
HOT AT ALL TIMES
FUSE 180 30A
FUSE 164 30A
FUSE BRACKET (ON BATTERY COVER)
WHT 5A
RED/GRY 16A
RED 3 T3
RED/BLK
RED/BLK 1
RED/WHT 2
RED 3
RED/BLK 4
T4E
2 RED
3 RED/YEL
1 RED/WHT
COOLANT FAN CONTROL (FC) THERMAL SWITCH (ON BOTTOM LEFT SIDE OF RADIATOR)
1 BLU/RED
2 GRN
AMBIENT TEMPERATURE SWITCH (ON RIGHT SIDE FRESH AIR INTAKE, BELOW WATER DEFLECTOR)
(NOT USED)
WHT
WHT 2
GRN 3
RED/GRY 4
BLU/RED 5
BRN/BLK 6
RED/YEL 7
BRN/BLU 8
BLK/BLU 9
BRN/RED
GRN/BLK 10
BRN/BLK 11
(NOT USED)
12
VIO/YEL 13
GRN 14
T14
COOLANT FAN CONTROL (FC) CONTROL MODULE (ON LOWER LEFT FRONT OF ENGINE COMPT, TO LEFT OF RADIATOR)
VIO/YEL 12
T32A
BRN
BRN/WHT 7
T32
INSTRUMENT CLUSTER
BRN 1
WHT 2
BLK/BLU 3
HIGH PRESSURE SENSOR
BLU/RED 1
T8B
HEATER-A/C CONTROL PANEL
RED/BLK
RED/BLK 1
RED/WHT 2
NCA
NCA
COOLANT FAN
M
NCA 3
BRN/BLK
RED/BLK 1
RED/WHT 2
NCA
NCA
RIGHT COOLANT FAN
M
NCA 3
BRN/BLK
BRN/RED
1
A/C CLUTCH
2
BLU/GRN
BRN/BLK
BRN/BLK
BRN/BLK
G12 (ON LEFT SIDE OF ENGINE COMPT)
2.0L
BLU/RED 40
GRN 29
GRN
GRN
MOTRONIC ENGINE CONTROL MODULE (ECM) (BELOW LEFT SIDE OF DASH PANEL COVER)
1.9L
BLU/RED 34
GRN 29
T121
DIESEL DIRECT FUEL INJECTION (DFI) ENGINE CONTROL MODULE (ECM) (BELOW LEFT SIDE OF DASH PANEL COVER)
GRN 12
T68
TRANSMISSION CONTROL MODULE (TCM) (BELOW RIGHT SIDE OF DASH)
190231