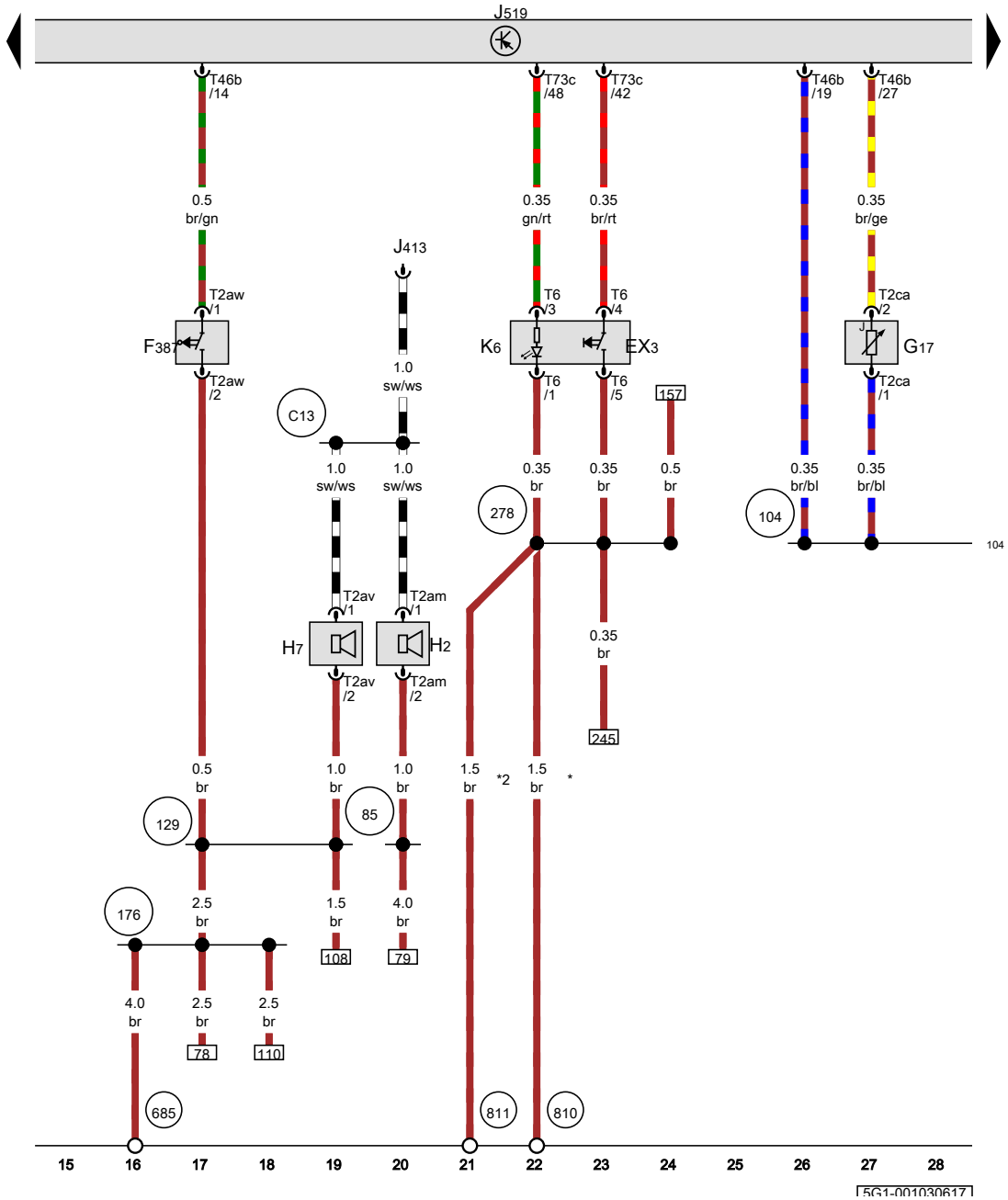

ws = white
sw = black
ro = red
rt = red
br = brown
gn = green
bl = blue
gr = grey
li = purple
vi = purple
ge = yellow
or = orange
rs = pink

Hazard warning light switch, Bonnet contact switch, Ambient temperature sensor, Treble horn, Bass horn, Onboard supply control unit

EX3	Hazard warning light switch
F387	Bonnet contact switch
G17	Ambient temperature sensor
H2	Treble horn
H7	Bass horn
J413	Horn relay
J519	Onboard supply control unit
K6	Indicator lamp for hazard warning light
T2am	2-pin connector
T2av	2-pin connector
T2aw	2-pin connector
T2ca	2-pin connector, black
T6	6-pin connector
T46b	46-pin connector
T73c	73-pin connector
85	Earth connection 1, in engine compartment wiring harness
104	Earth connection in front right wiring harness - sensor earth -
129	Earth connection, in dual tone horn wiring harness
176	Earth connection, in right headlight wiring harness
278	Earth connection 4, in interior wiring harness
685	Earth point 1, on front of right longitudinal member
810	Earth point on central tube for dash panel, centre left
811	Earth point on central tube for dash panel, centre right
C13	Positive connection in dual tone horn wiring harness
*	For left-hand drive models
*2	For right-hand drive models

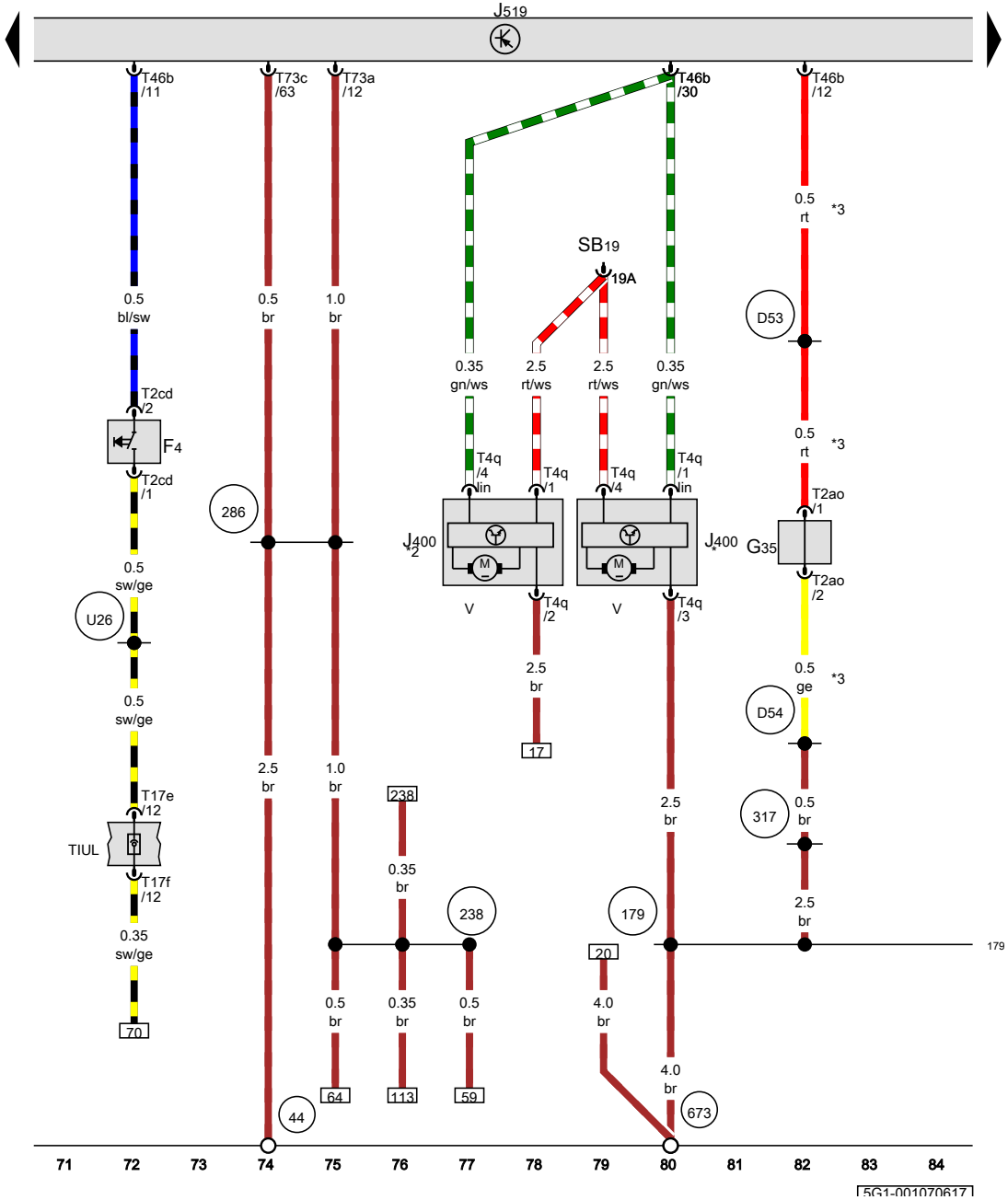

ws = white
sw = black
ro = red
rt = red
br = brown
gn = green
bl = blue
gr = grey
li = purple
vi = purple
ge = yellow
or = orange
rs = pink

Reversing light switch, Front right brake pad wear sender, Wiper motor control unit, Onboard supply control unit

F4	Reversing light switch
G35	Front right brake pad wear sender
J400	Wiper motor control unit
J519	Onboard supply control unit
SB19	Fuse 19 on fuse holder B
T2ao	2-pin connector
T2cd	2-pin connector
T4q	4-pin connector
T17e	17-pin connector, brown
T17f	17-pin connector, black
T46b	46-pin connector
T73a	73-pin connector, black
T73c	73-pin connector
TIUL	Coupling point in interior, below left
V	Windscreen wiper motor
44	Earth point, lower part of left A-pillar
179	Earth connection, in left headlight wiring harness
238	Earth connection 1, in interior wiring harness
286	Earth connection 8, in interior wiring harness
317	Earth connection 7, in engine compartment wiring harness
673	Earth point 3, on front of left longitudinal member
D53	Connection (right brake wear indicator), in engine compartment wiring harness
D54	Connection (right brake wear indicator), in engine compartment wiring harness
U26	Connection (15), in gearbox switch wiring harness
*	For left-hand drive models
*2	For right-hand drive models
*3	Different wire colour possible

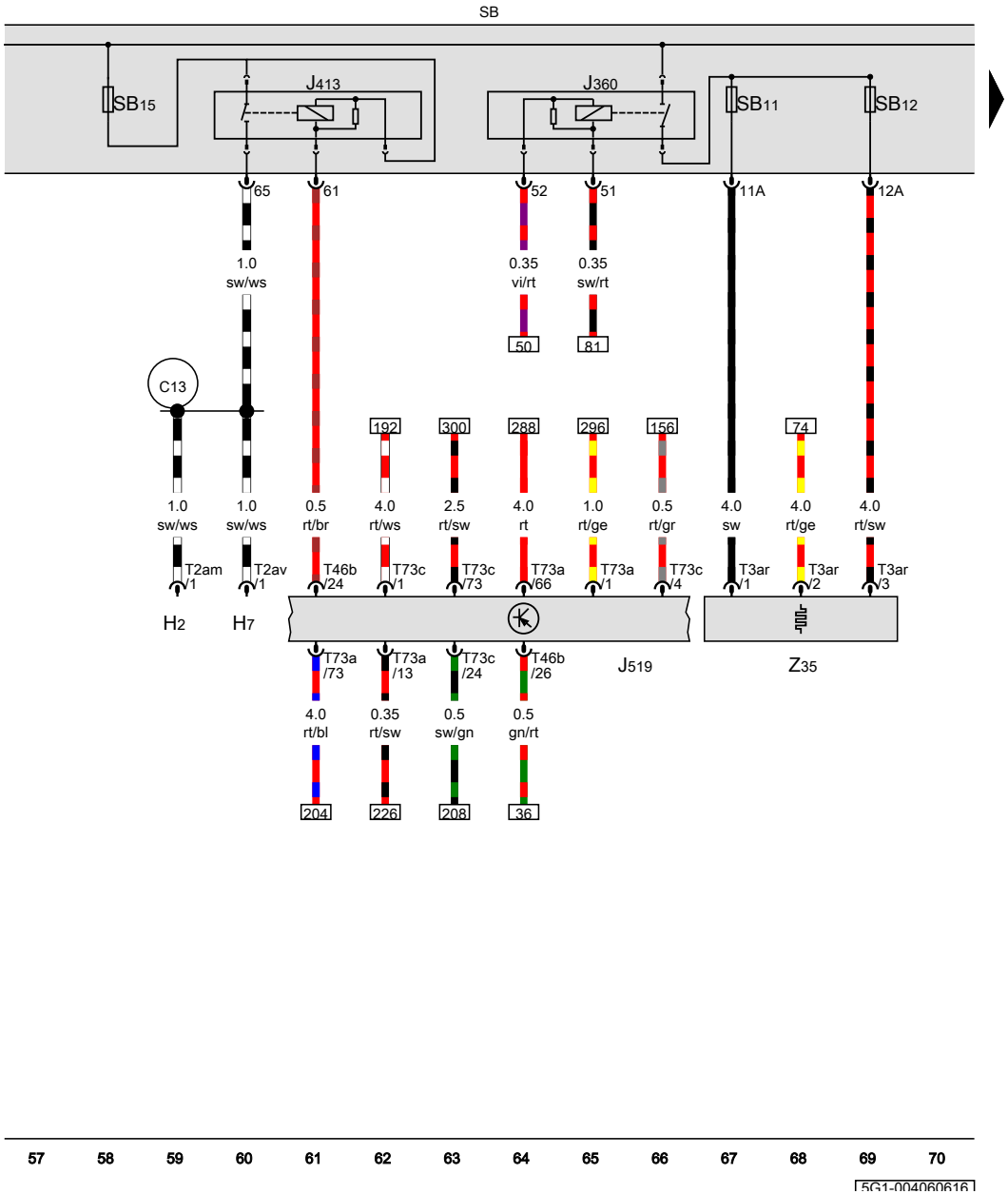

High heat output relay, Horn relay, Fuse holder B

H2	Treble horn
H7	Bass horn
J360	High heat output relay
J413	Horn relay
J519	Onboard supply control unit
SB	Fuse holder B
SB11	Fuse 11 on fuse holder B
SB12	Fuse 12 on fuse holder B
SB15	Fuse 15 on fuse holder B
T2am	2-pin connector
T2av	2-pin connector
T3ar	3-pin connector
T46b	46-pin connector
T73a	73-pin connector, black
T73c	73-pin connector
Z35	Auxiliary air heater element
C13	Positive connection in dual tone horn wiring harness

ws	=	white
sw	=	black
ro	=	red
rt	=	red
br	=	brown
gn	=	green
bl	=	blue
gr	=	grey
li	=	purple
vi	=	purple
ge	=	yellow
or	=	orange
rs	=	pink

Starter, Battery monitor control unit, Starter relay 1, Starter relay 2, Fuse holder B

A	Battery
B	Starter
J367	Battery monitor control unit
J906	Starter relay 1
J907	Starter relay 2
SB	Fuse holder B, in E-box in engine compartment
SB17	Fuse 17 on fuse holder B
SB18	Fuse 18 on fuse holder B
SB22	Fuse 22 on fuse holder B
SB23	Fuse 23 on fuse holder B
T2bn	2-pin connector
508	Threaded connection (30) on E-box
B698	Connection 3 (LIN bus) in main wiring harness
D52	Positive connection (15a), in engine compartment wiring harness
*	Up to May 2014
*2	Cross-section 35.0 possible
*3	From May 2014

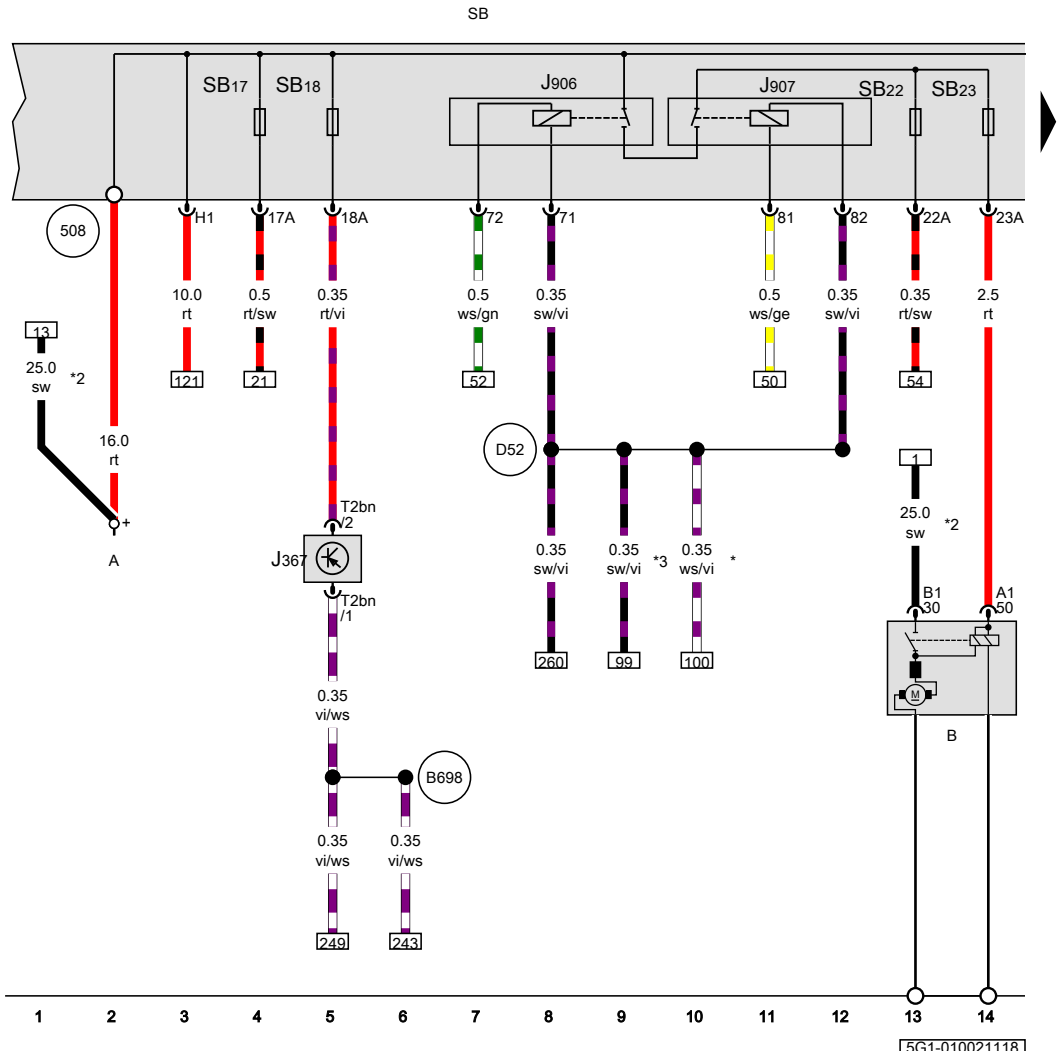

ws	=	white
sw	=	black
ro	=	red
rt	=	red
br	=	brown
gn	=	green
bl	=	blue
gr	=	grey
li	=	purple
vi	=	purple
ge	=	yellow
or	=	orange
rs	=	pink

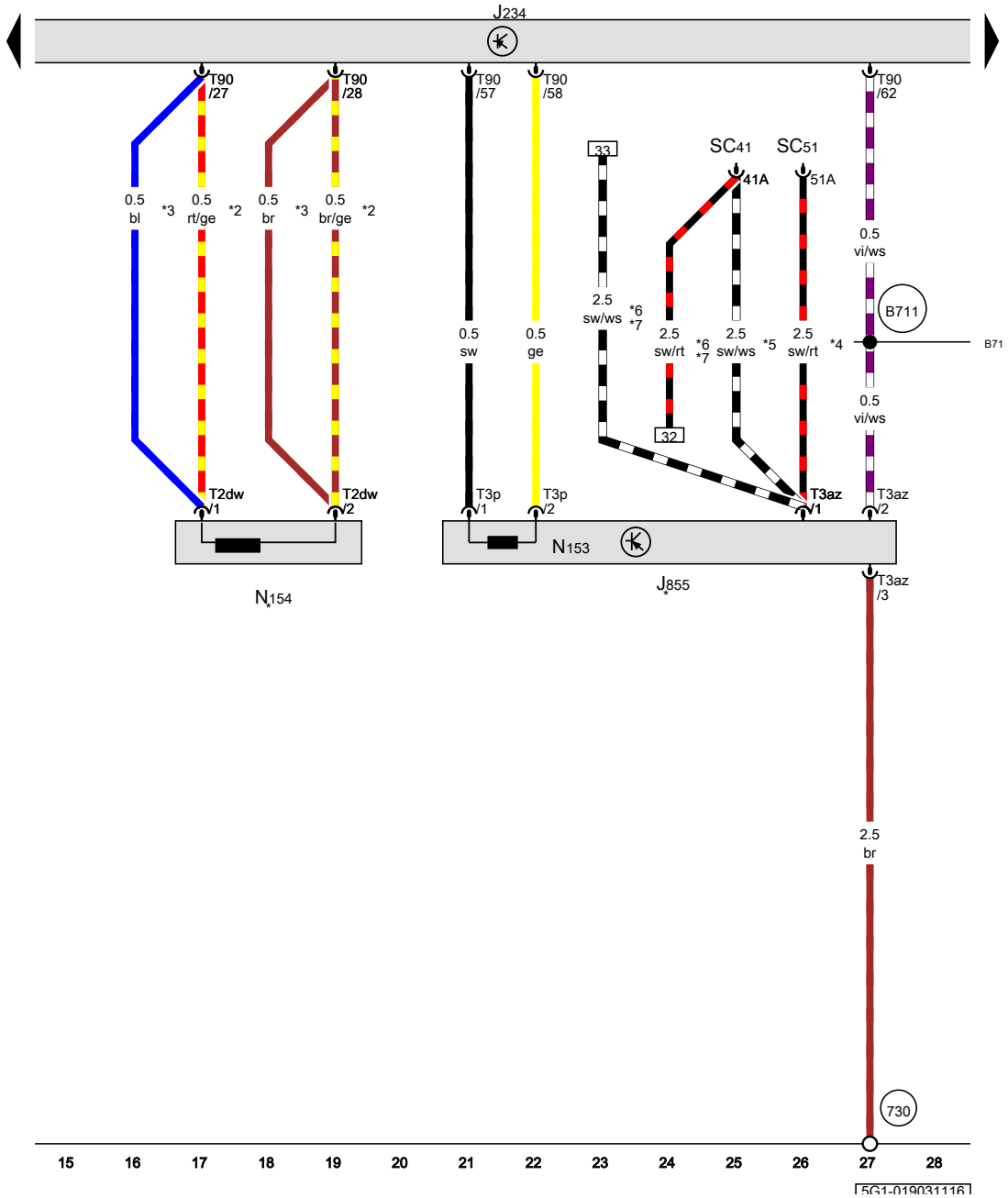

ws = white
sw = black
ro = red
rt = red
br = brown
gn = green
bl = blue
gr = grey
li = purple
vi = purple
ge = yellow
or = orange
rs = pink

Airbag control unit, Control unit for front right belt tensioner, Driver seat belt tensioner igniter 1, Front passenger seat belt tensioner igniter 1

J234	Airbag control unit
J855	Control unit for front right belt tensioner
N153	Driver seat belt tensioner igniter 1
N154	Front passenger seat belt tensioner igniter 1
SC41	Fuse 41 on fuse holder C
SC51	Fuse 51 on fuse holder C
T2dw	2-pin connector
T3az	3-pin connector
T3p	3-pin connector
T90	90-pin connector
730	Earth point 1, on right rear wheel housing
B711	Connection 6 (LIN bus) in main wiring harness
*	According to equipment
*2	Only models with 4-doors
*3	Only models with 2-doors
*4	Up to November 2013
*5	From May 2014
*6	From November 2013
*7	Up to May 2014

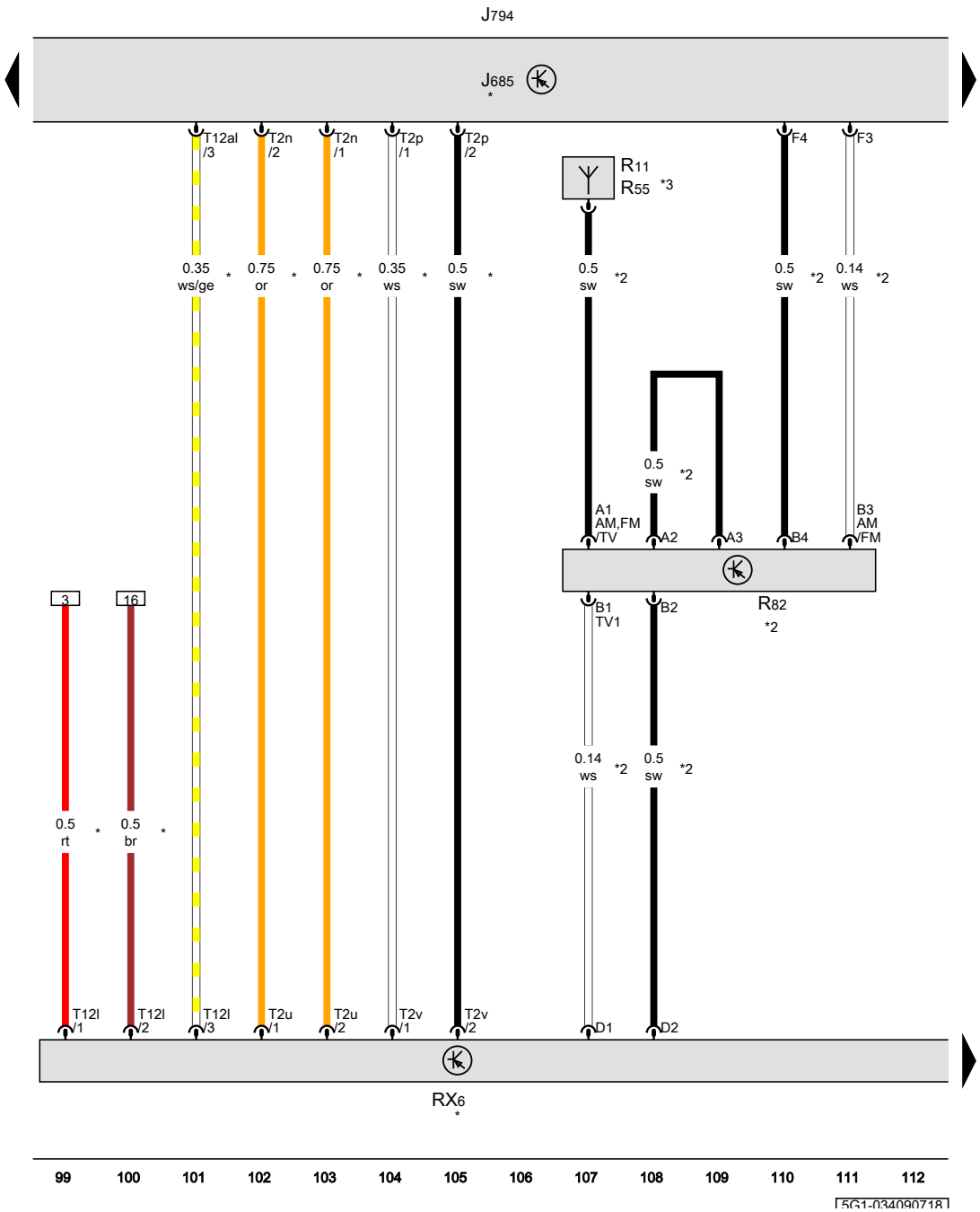

Control unit 1 for information electronics, TV tuner, Aerial amplifier 1 for TV

J685	Display unit for front information display and operating unit control unit
J794	Control unit 1 for information electronics
RX6	TV tuner
R11	Aerial
R55	TV aerial 1
R82	Aerial amplifier 1 for TV, Rear window, top right
T2n	2-pin connector, black
T2p	2-pin connector
T2u	2-pin connector, black
T2v	2-pin connector, green
T12al	12-pin connector, grey
T12l	12-pin connector, black
*	According to equipment
*2	For models with TV tuner
*3	Rear window aerial

ws	=	white
sw	=	black
ro	=	red
rt	=	red
br	=	brown
gn	=	green
bl	=	blue
gr	=	grey
li	=	purple
vi	=	purple
ge	=	yellow
or	=	orange
rs	=	pink

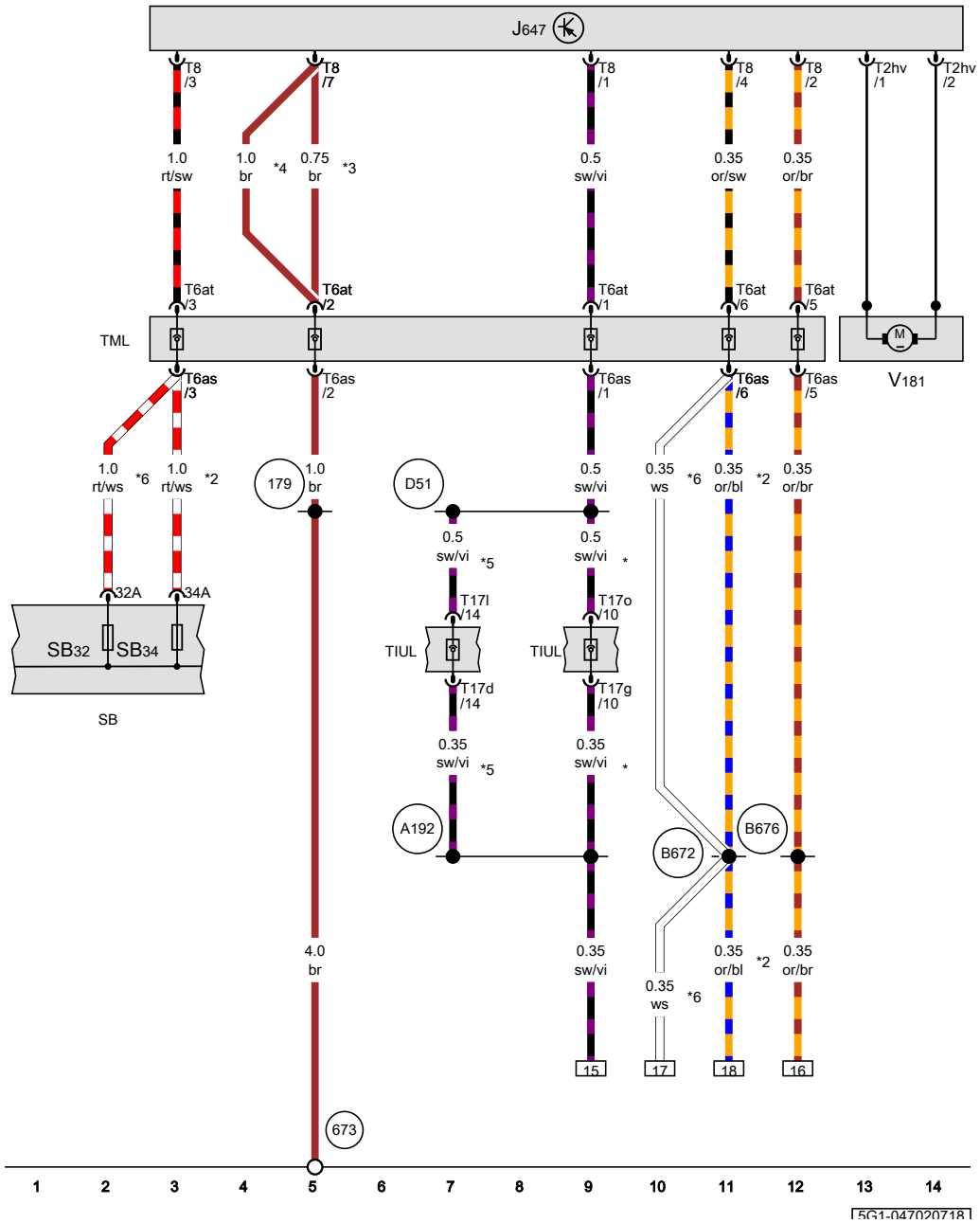

ws = white
sw = black
ro = red
rt = red
br = brown
gn = green
bl = blue
gr = grey
li = purple
vi = purple
ge = yellow
or = orange
rs = pink

Axle differential lock control unit, Fuse holder B, Fuse 34 on fuse holder B, All-wheel drive coupling pump

J647	Axle differential lock control unit
SB	Fuse holder B
SB32	Fuse 32 on fuse holder B
SB34	Fuse 34 on fuse holder B
T2hv	2-pin connector
T6as	6-pin connector, grey
T6at	6-pin connector, grey
T8	8-pin connector
T17d	17-pin connector, black
T17g	17-pin connector, blue
T17l	17-pin connector, black
T17o	17-pin connector, blue
TIUL	Coupling point in interior, below left
TML	Coupling point in engine compartment, left
V181	All-wheel drive coupling pump
179	Earth connection, in left headlight wiring harness
673	Earth point 3, on front of left longitudinal member
A192	Positive connection 3 (15a) in dash panel wiring harness
B672	Connection 1 (running gear/dash panel insert CAN bus, high), in main wiring harness
B676	Connection 1 (running gear/dash panel insert CAN bus, low), in main wiring harness
D51	Positive connection 1 (15), in engine compartment wiring harness
*	From May 2017
*2	Up to July 2018
*3	Up to November 2015
*4	From November 2015
*5	Up to May 2017
*6	From July 2018

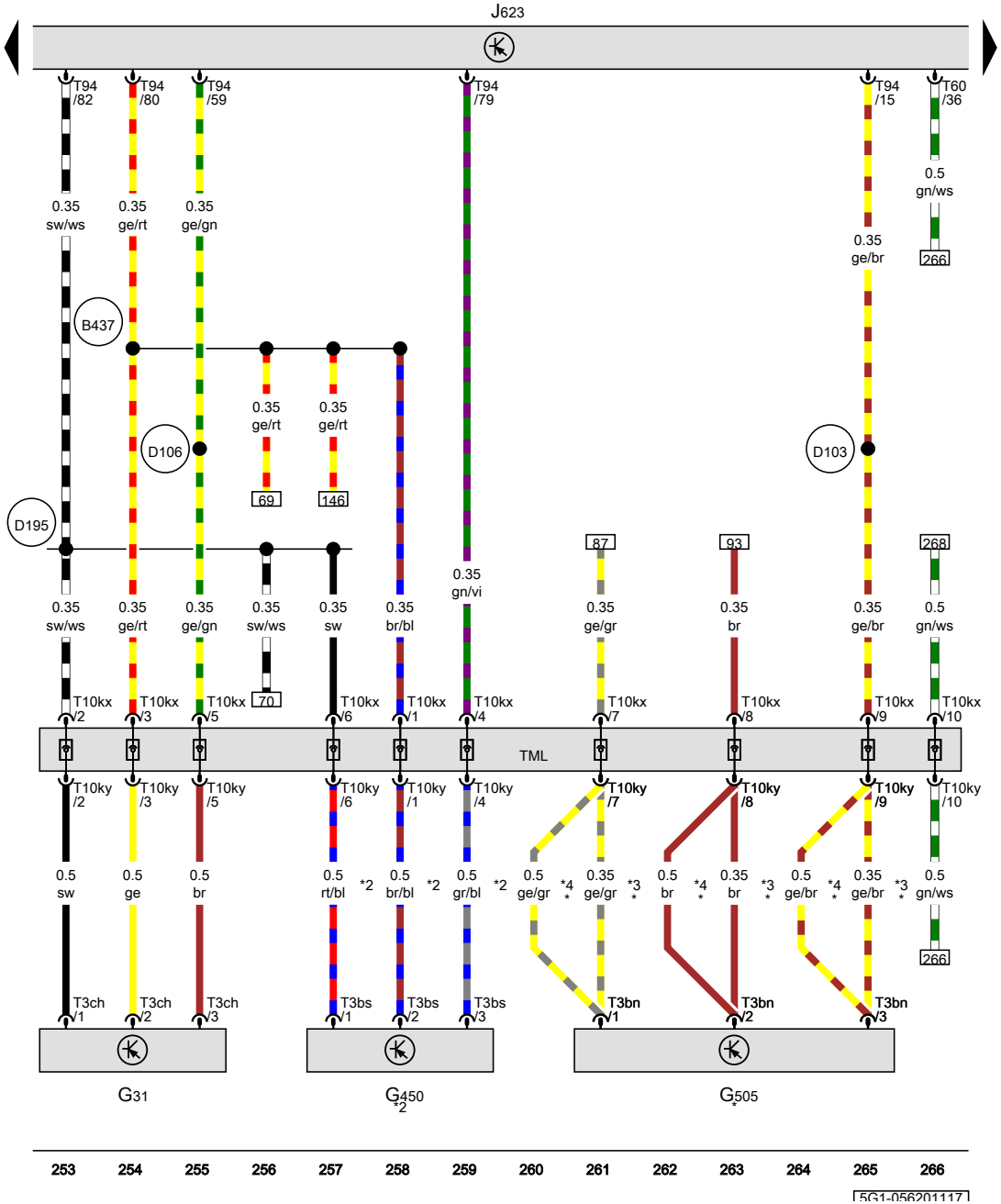

ws = white
sw = black
ro = red
rt = red
br = brown
gn = green
bl = blue
gr = grey
li = purple
vi = purple
ge = yellow
or = orange
rs = pink

Charge pressure sender, Exhaust gas pressure sensor 1, Pressure differential sender, Engine/motor control unit

G31	Charge pressure sender
G450	Exhaust gas pressure sensor 1
G505	Pressure differential sender
J623	Engine/motor control unit
T3bn	3-pin connector
T3bs	3-pin connector
T3ch	3-pin connector
T10kx	10-pin connector, black
T10ky	10-pin connector, black
T60	60-pin connector
T94	94-pin connector
TML	Coupling point in engine compartment, left
B437	Connection 1 (GND (earth)), in main wiring harness
D103	Connection 3 in engine compartment wiring harness
D106	Connection 4 in engine compartment wiring harness
D195	Connection 1 (5V) in engine compartment wiring harness
*	Not for models with Euro 4 emission standard
*2	Not for models with Euro 6 plus emission standard
*3	Up to May 2014
*4	From May 2014

Knock sensor 1, Engine control unit, Injector, cylinder 1, Injector, cylinder 2, Injector, cylinder 3, Injector, cylinder 4

G61	Knock sensor 1
J623	Engine control unit
N30	Injector, cylinder 1
N31	Injector, cylinder 2
N32	Injector, cylinder 3
N33	Injector, cylinder 4
T2cl	2-pin connector
T2cm	2-pin connector
T2cn	2-pin connector
T2co	2-pin connector
T2dc	2-pin connector
T60	60-pin connector
*	Different wiring routing possible

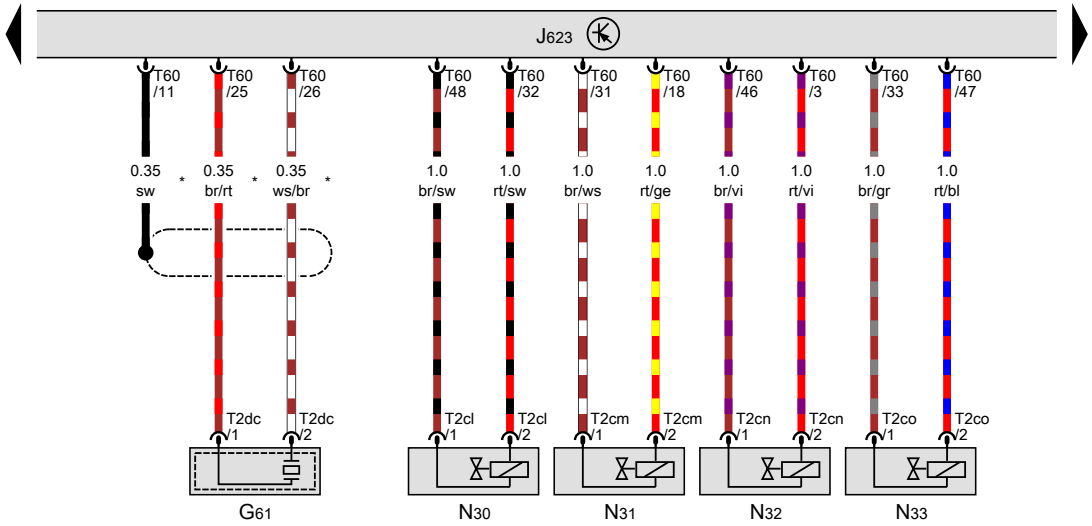

ws	=	white
sw	=	black
ro	=	red
rt	=	red
br	=	brown
gn	=	green
bl	=	blue
gr	=	grey
li	=	purple
vi	=	purple
ge	=	yellow
or	=	orange
rs	=	pink

197 198 199 200 201 202 203 204 205 206 207 208 209 210

5G1-0721612151

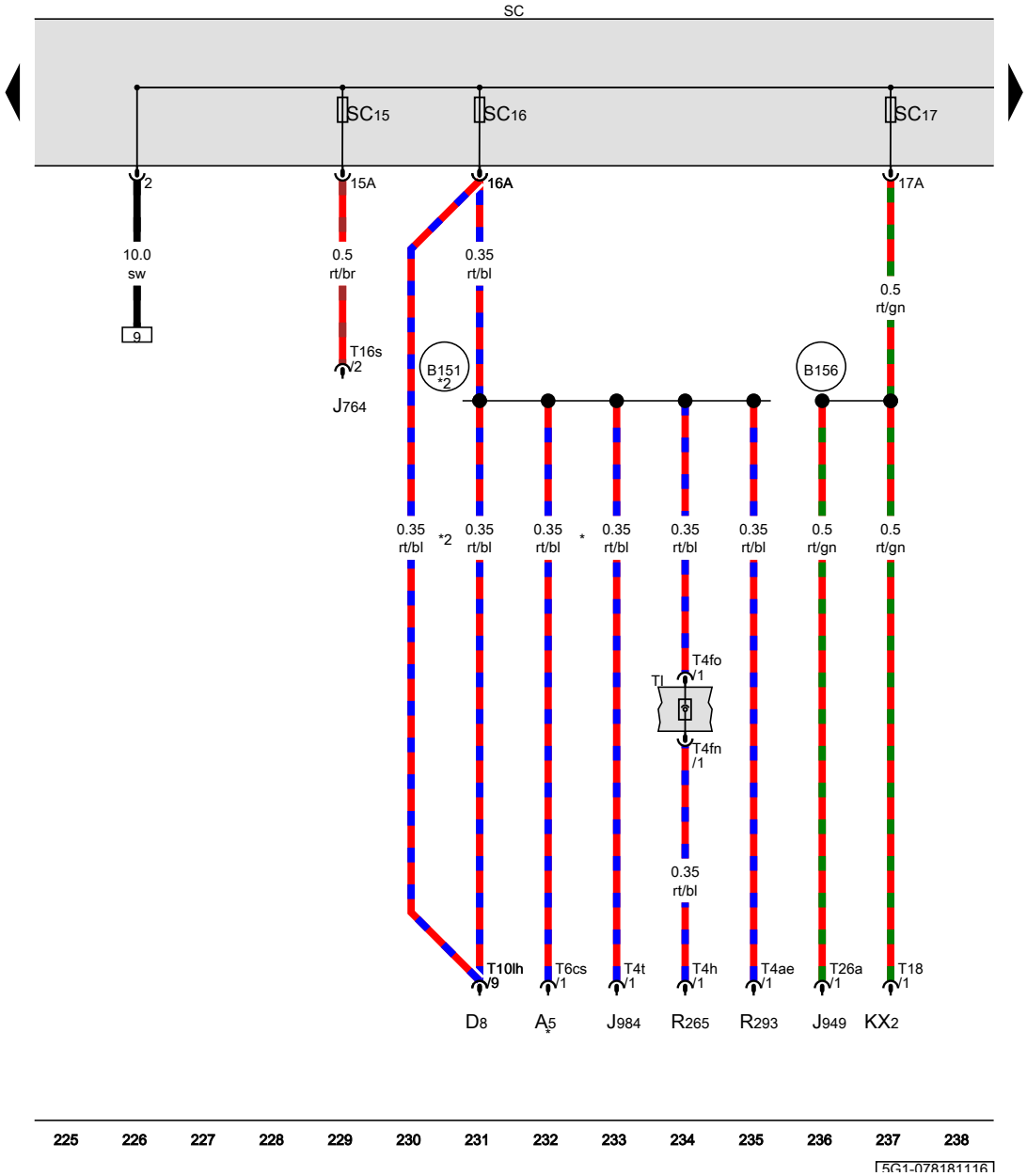

ws = white
sw = black
ro = red
rt = red
br = brown
gn = green
bl = blue
gr = grey
li = purple
vi = purple
ge = yellow
or = orange
rs = pink

Fuse holder C

A5	Voltage converter for USB charge module, under centre console
D8	Chip card reader
J764	Control unit for electronic steering column lock
J949	Emergency call module control unit and communication unit
J984	Two-way signal amplifier for mobile telephone/data services
KX2	Dash panel insert
R265	Storage compartment with interface for mobile telephone
R293	USB hub, under centre console
SC	Fuse holder C
SC15	Fuse 15 on fuse holder C
SC16	Fuse 16 on fuse holder C
SC17	Fuse 17 on fuse holder C
T4ae	4-pin connector
T4fn	4-pin connector, brown
T4fo	4-pin connector, brown
T4h	4-pin connector
T4t	4-pin connector
T6cs	6-pin connector
T10lh	10-pin connector
T16s	16-pin connector
T18	18-pin connector
T26a	26-pin connector
TI	Coupling point in interior, in centre console
B151	Positive connection 3 (30a), in interior wiring harness
B156	Positive connection (30a), in interior wiring harness
*	Up to November 2015
*2	According to equipment

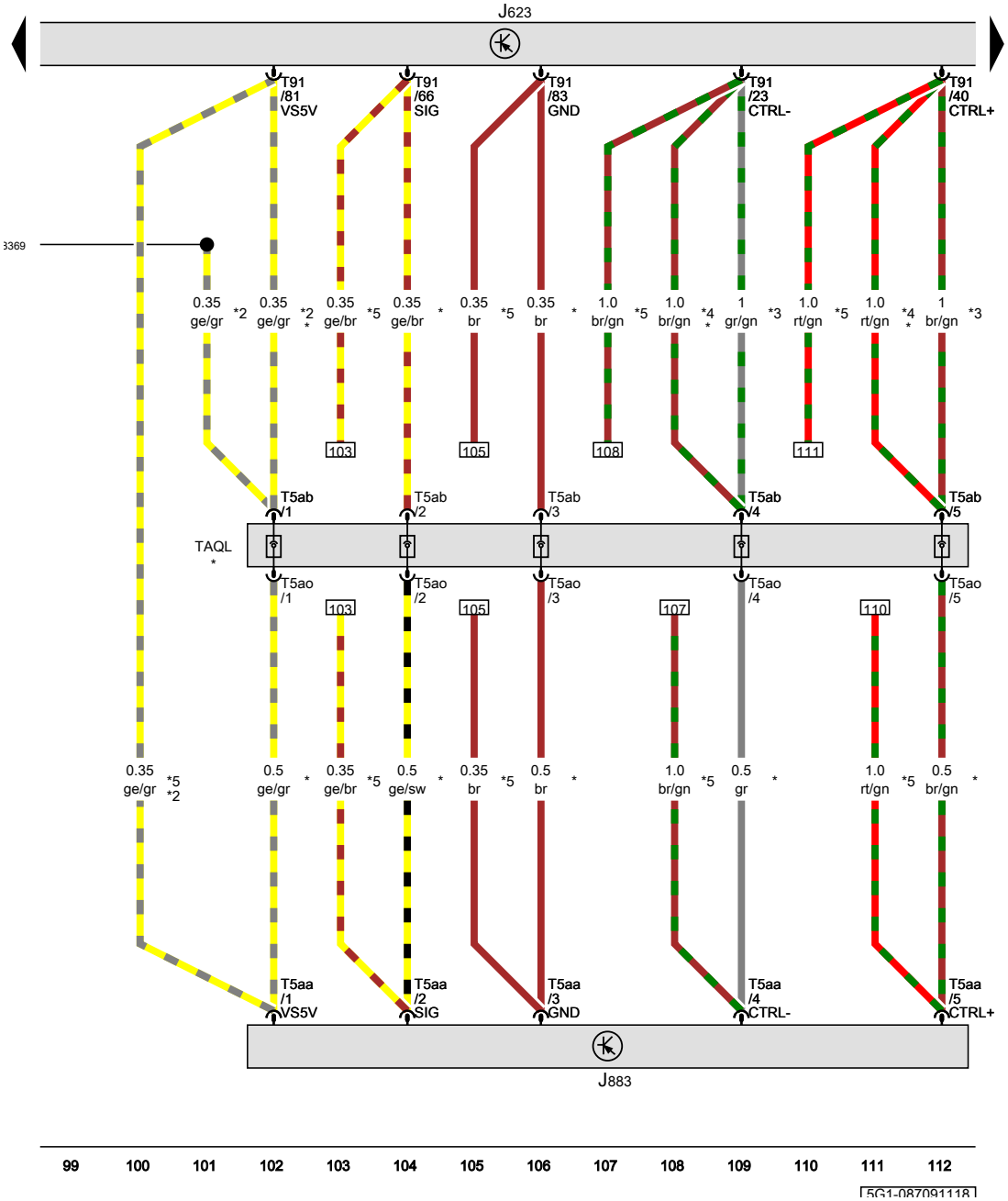

Engine/motor control unit, Exhaust flap control unit

J623	Engine/motor control unit
J883	Exhaust flap control unit
T5aa	5-pin connector, black
T5ab	5-pin connector, brown
T5ao	5-pin connector, brown
T91	91-pin connector, black
TAQL	Coupling point on rear cross member, left
B369	Connection 1 (5V), in main wiring harness
*	Up to November 2018
*2	According to equipment
*3	Up to November 2017
*4	From November 2017
*5	From November 2018

ws	=	white
sw	=	black
ro	=	red
rt	=	red
br	=	brown
gn	=	green
bl	=	blue
gr	=	grey
li	=	purple
vi	=	purple
ge	=	yellow
or	=	orange
rs	=	pink

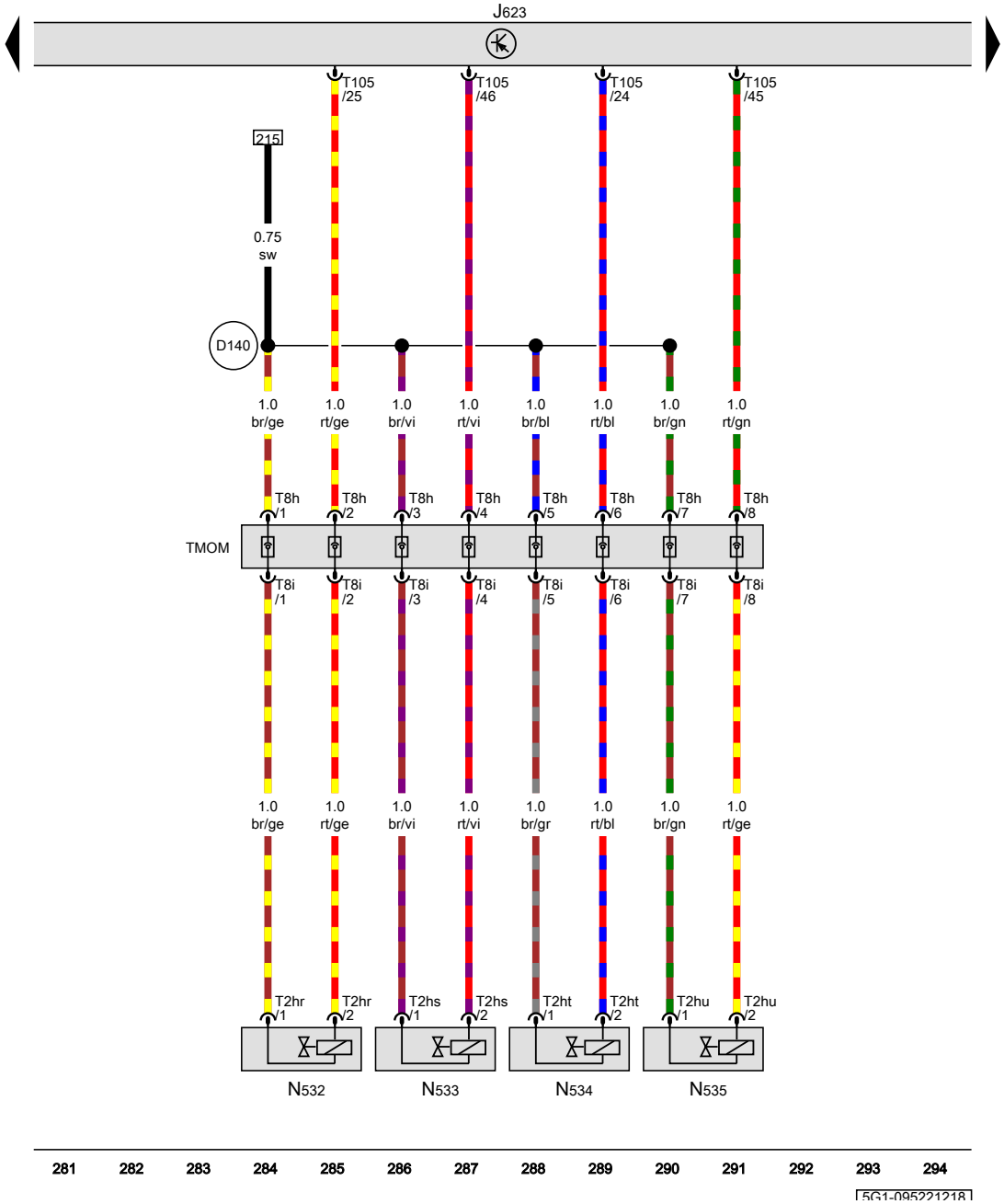

Engine/motor control unit, Injector 2, cylinder 1, Injector 2, cylinder 2, Injector 2, cylinder 3, Injector 2, cylinder 4

J623	Engine/motor control unit
N532	Injector 2, cylinder 1
N533	Injector 2, cylinder 2
N534	Injector 2, cylinder 3
N535	Injector 2, cylinder 4
T2hr	2-pin connector, black
T2hs	2-pin connector, black
T2ht	2-pin connector, black
T2hu	2-pin connector, black
T8h	8-pin connector, black
T8i	8-pin connector, black
T105	105-pin connector, black
TMOM	Coupling point on engine, top centre
D140	Connection (injectors), in engine prewiring harness

ws	=	white
sw	=	black
ro	=	red
rt	=	red
br	=	brown
gn	=	green
bl	=	blue
gr	=	grey
li	=	purple
vi	=	purple
ge	=	yellow
or	=	orange
rs	=	pink

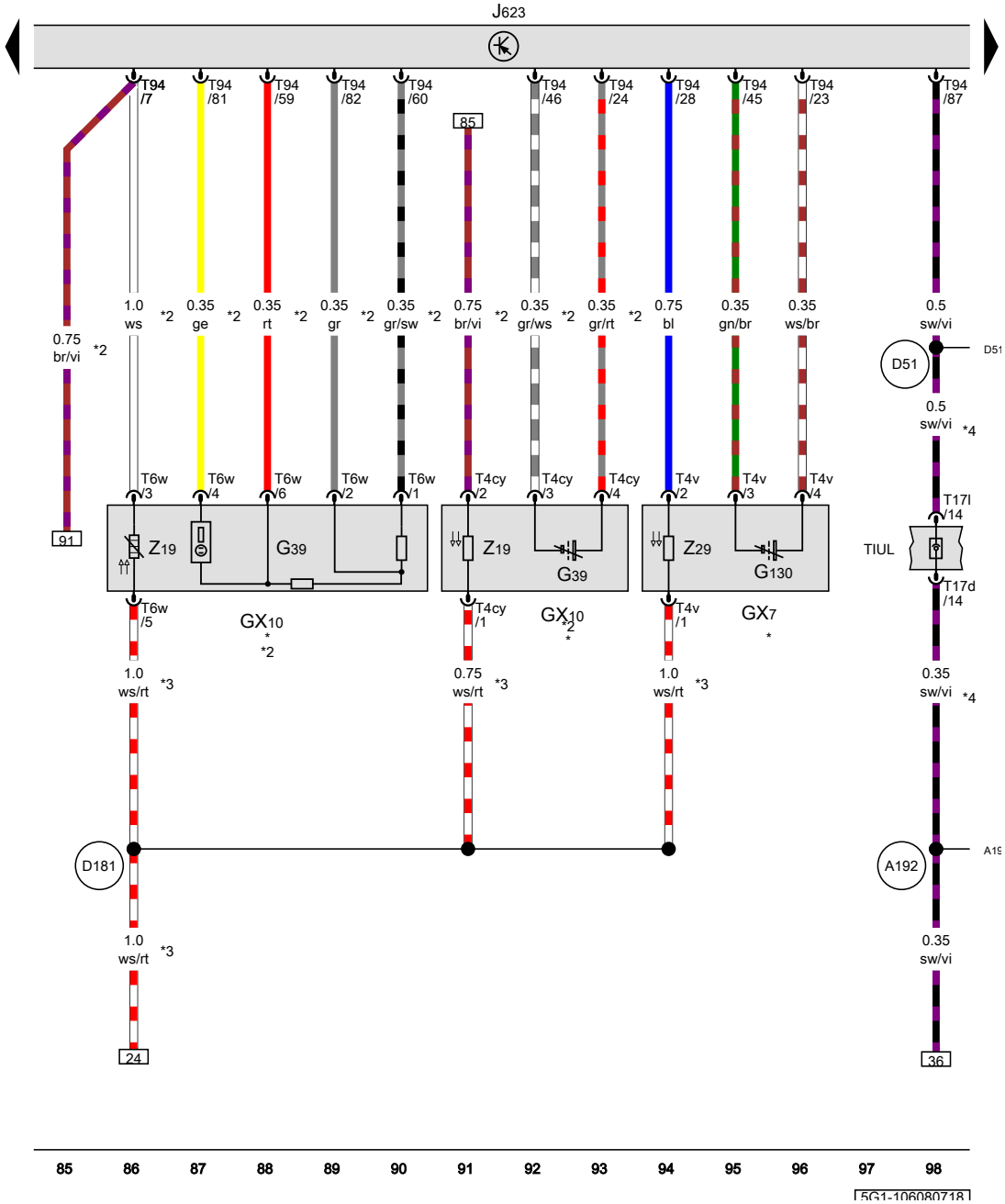

ws = white
sw = black
ro = red
rt = red
br = brown
gn = green
bl = blue
gr = grey
li = purple
vi = purple
ge = yellow
or = orange
rs = pink

Lambda probe 1 after catalytic converter, Lambda probe 1 before catalytic converter, Engine/motor control unit

GX7	Lambda probe 1 after catalytic converter
GX10	Lambda probe 1 before catalytic converter
G39	Lambda probe
G130	Lambda probe after catalytic converter
J623	Engine/motor control unit
T4cy	4-pin connector, brown
T4v	4-pin connector
T6w	6-pin connector
T17d	17-pin connector, black
T17l	17-pin connector, black
T94	94-pin connector
TIUL	Coupling point in interior, below left
Z19	Lambda probe heater
Z29	Lambda probe 1 heater after catalytic converter
A192	Positive connection 3 (15a) in dash panel wiring harness
D51	Positive connection 1 (15), in engine compartment wiring harness
D181	Connection 2 (87a), in engine compartment wiring harness
*	Pre-wired component
*2	According to equipment
*3	Cross section depends on equipment
*4	From May 2017

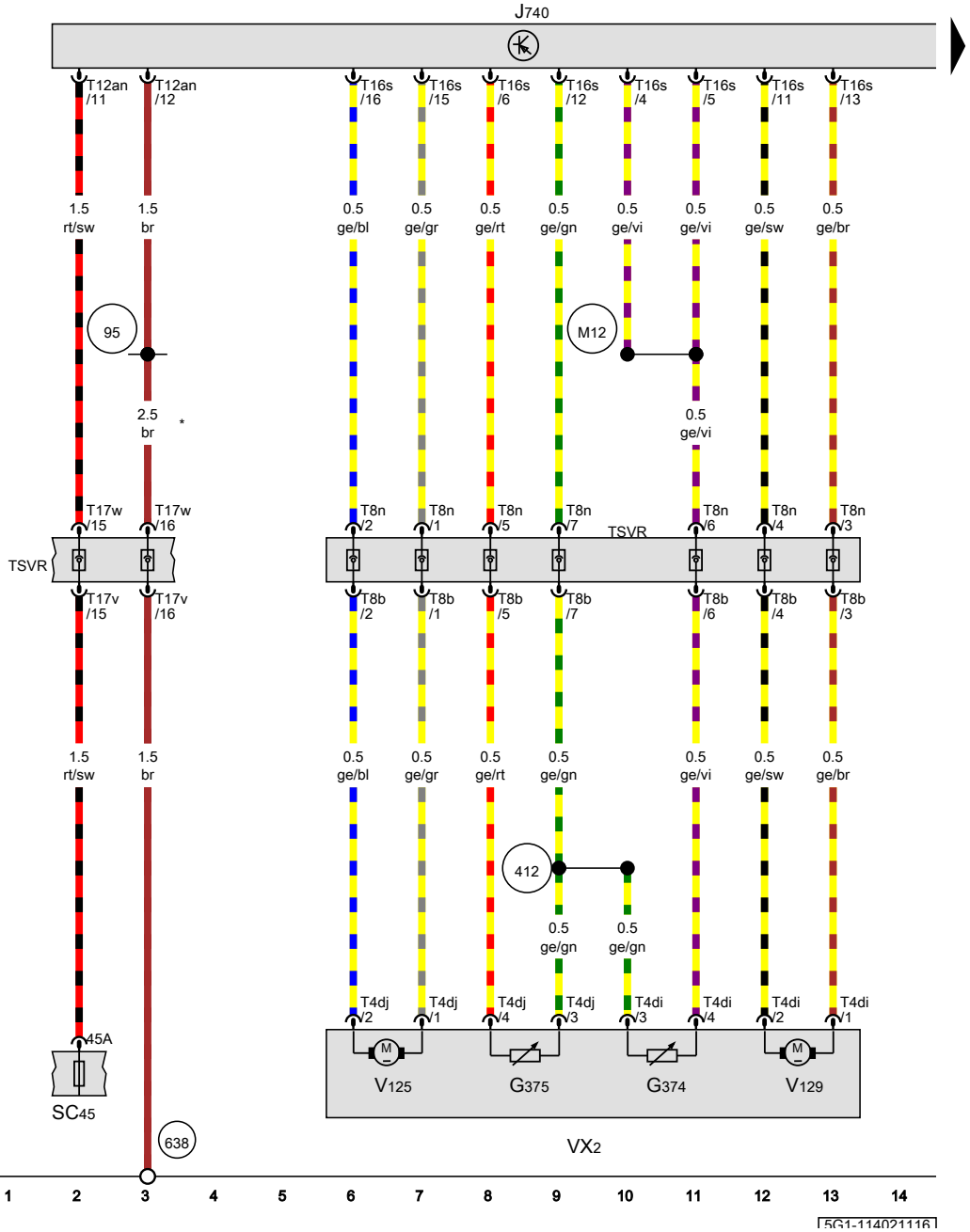

ws = white
sw = black
ro = red
rt = red
br = brown
gn = green
bl = blue
gr = grey
li = purple
vi = purple
ge = yellow
or = orange
rs = pink

Lumbar support height adjustment sender, Lumbar support longitudinal adjustment sender, Massage control unit, Lumbar support for driver seat

G374	Lumbar support height adjustment sender
G375	Lumbar support longitudinal adjustment sender
J740	Massage control unit
SC45	Fuse 45 on fuse holder C
T4di	4-pin connector
T4dj	4-pin connector
T8b	8-pin connector, black
T8n	8-pin connector, black
T12an	12-pin connector
T16s	16-pin connector
T17v	17-pin connector, red
T17w	17-pin connector, red
TSVR	Coupling point for front right seat
VX2	Lumbar support for driver seat
V125	Driver seat lumbar support longitudinal adjustment motor
V129	Driver seat lumbar support height adjustment motor
95	Earth connection 1, in seat adjustment wiring harness
412	Earth connection 3, in seat adjustment wiring harness
638	Earth point, on right A-pillar
M12	Connection 3, in driver seat adjustment wiring harness
*	Cross section depends on equipment

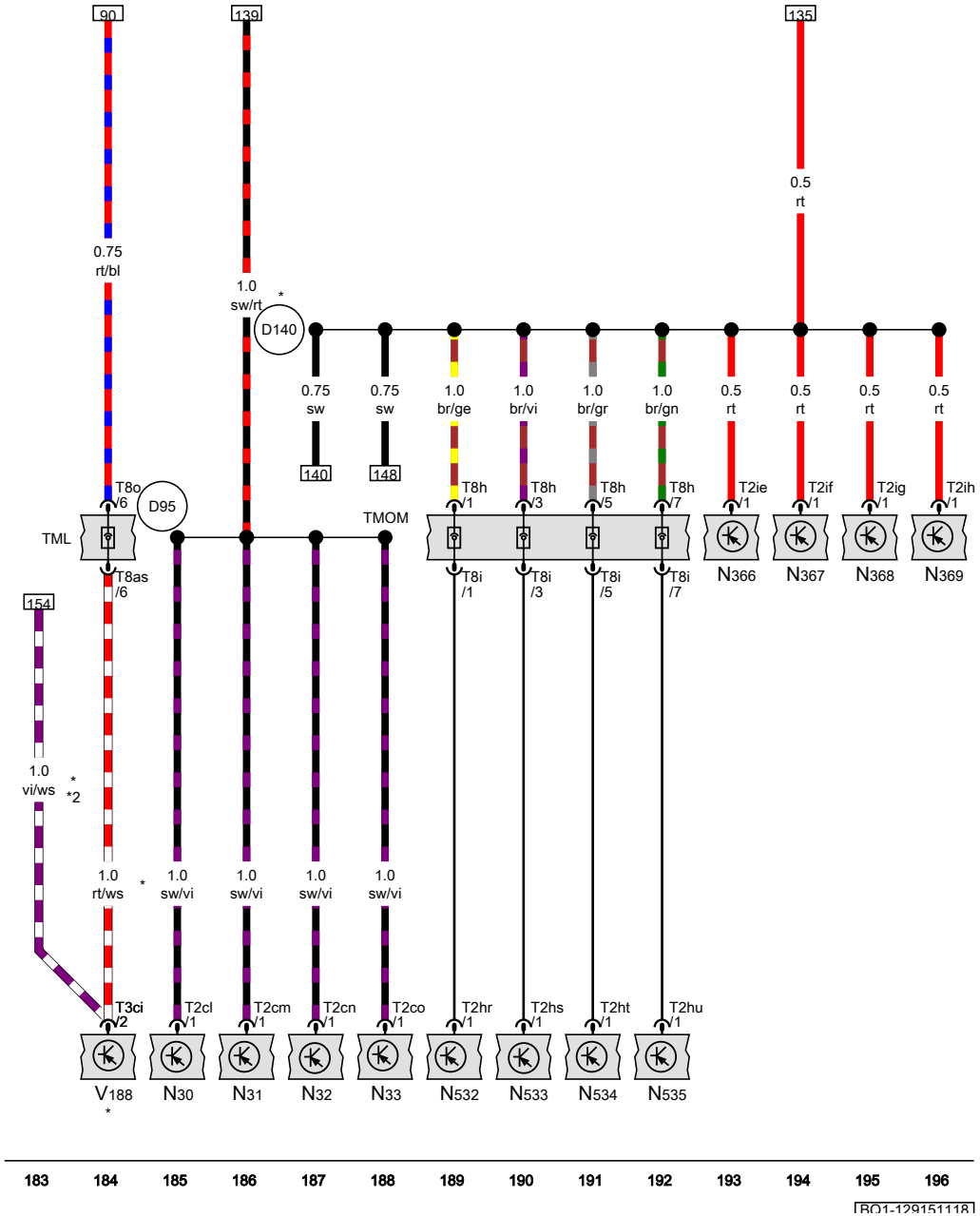

ws = white
sw = black
ro = red
rt = red
br = brown
gn = green
bl = blue
gr = grey
li = purple
vi = purple
ge = yellow
or = orange
rs = pink

Coupling point on engine, top centre

N30	Injector, cylinder 1
N31	Injector, cylinder 2
N32	Injector, cylinder 3
N33	Injector, cylinder 4
N366	Gas injection valve 1
N367	Gas injection valve 2
N368	Gas injection valve 3
N369	Gas injection valve 4
N532	Injector 2, cylinder 1
N533	Injector 2, cylinder 2
N534	Injector 2, cylinder 3
N535	Injector 2, cylinder 4
T2cl	2-pin connector
T2cm	2-pin connector
T2cn	2-pin connector
T2co	2-pin connector
T2hr	2-pin connector
T2hs	2-pin connector
T2ht	2-pin connector
T2hu	2-pin connector
T2ie	2-pin connector
T2if	2-pin connector
T2ig	2-pin connector
T2ih	2-pin connector
T3ci	3-pin connector
T8as	8-pin connector, black
T8h	8-pin connector, black
T8i	8-pin connector, black
T8o	8-pin connector, black
TML	Coupling point in engine compartment, left
TMOM	Coupling point on engine, top centre
V188	Charge air cooling pump
D95	Connection (injectors), in engine compartment wiring harness
D140	Connection (injectors), in engine prewiring harness
*	see applicable current flow diagram for engine
*2	Different wire colour possible