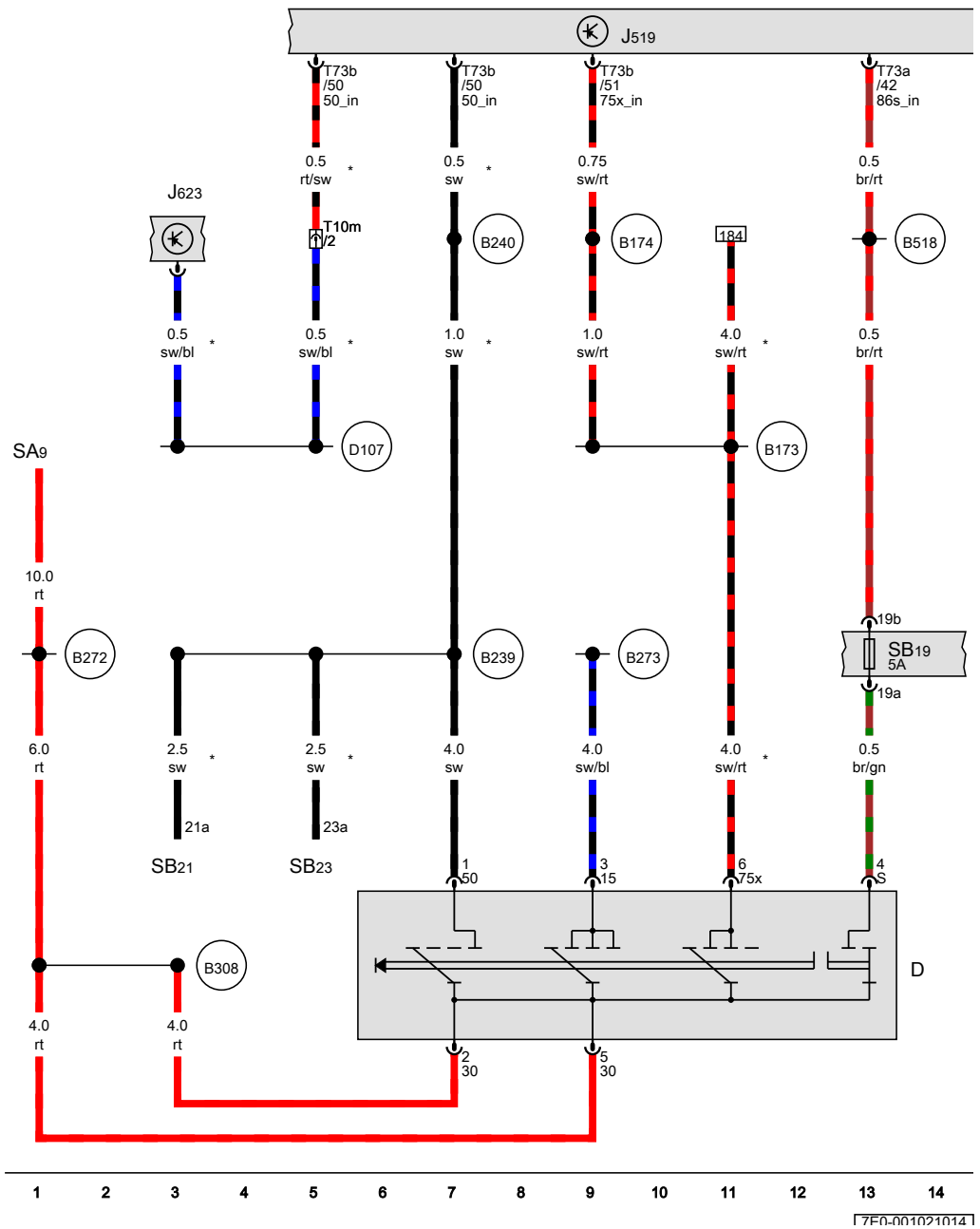

ws = white
sw = black
ro = red
rt = red
br = brown
gn = green
bl = blue
gr = grey
li = purple
vi = purple
ge = yellow
or = orange
rs = pink

Ignition/starter switch, Onboard supply control unit, Fuse 9 in fuse holder A, Fuse 19 on fuse holder B, Fuse 21 on fuse holder B, Fuse 23 on fuse holder B

D	Ignition/starter switch
J519	Onboard supply control unit
J623	Engine control unit
SA9	Fuse 9 in fuse holder A
SB19	Fuse 19 on fuse holder B
SB21	Fuse 21 on fuse holder B
SB23	Fuse 23 on fuse holder B
T10m	10-pin connector, light pink, in E-box
T73a	73-pin connector, black
T73b	73-pin connector, white
B173	Positive connection 2 (X), in interior wiring harness
B174	Positive connection 3 (X), in interior wiring harness
B239	Positive connection 1 (50), in interior wiring harness
B240	Positive connection 2 (50), in interior wiring harness
B272	Positive connection (30), in main wiring harness
B273	Positive connection (15), in main wiring harness
B308	Positive connection 12 (30), in main wiring harness
B518	Connection (86s), in main wiring harness
D107	Connection 5 in engine compartment wiring harness
*	see applicable current flow diagram for engine

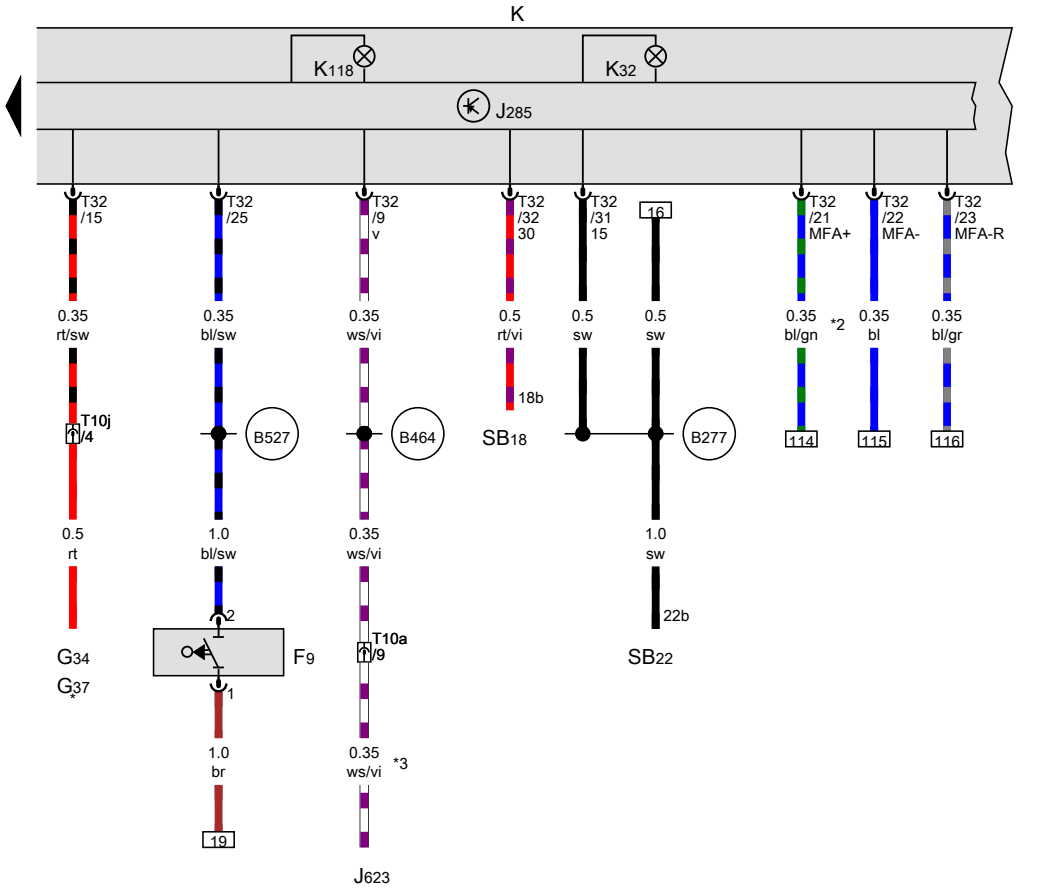

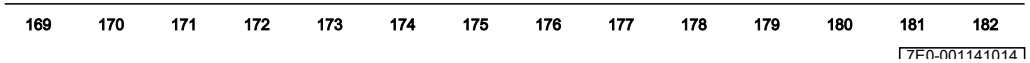

Handbrake warning switch, Front left brake pad wear sender, Rear right brake pad wear sender, Dash panel insert

F9	Handbrake warning switch
G34	Front left brake pad wear sender
G37	Rear right brake pad wear sender
J285	Control unit in dash panel insert
J623	Engine control unit
K	Dash panel insert
K32	Brake pad warning lamp
K118	Brake system warning lamp
SB18	Fuse 18 on fuse holder B
SB22	Fuse 22 on fuse holder B
T10a	10-pin connector, brown, in E-box
T10j	10-pin connector, dark brown, in E-box
T32	32-pin connector, blue
B277	Positive connection 1 (15a) in main wiring harness
B464	Connection (speed signal), in main wiring harness
B527	Connection (handbrake), in main wiring harness
*	see applicable current flow diagram for ABS
*2	Gradually discontinued
*3	see applicable current flow diagram for engine

ws	=	white
sw	=	black
ro	=	red
rt	=	red
br	=	brown
gn	=	green
bl	=	blue
gr	=	grey
li	=	purple
vi	=	purple
ge	=	yellow
or	=	orange
rs	=	pink

Rear fresh air blower switch, Rear air distribution control motor, Rear temperature flap control motor, Rear air distribution control motor 2

E179	Rear fresh air blower switch, in roof
G478	Potentiometer for rear air distribution control motor
G479	Potentiometer for rear temperature flap motor
G683	Potentiometer for rear air distribution control motor 2
T16a	16-pin connector, black
V136	Rear air distribution control motor
V137	Rear temperature flap control motor
V435	Rear air distribution control motor 2
170	Earth connection 1, in air conditioning system/Climatronic operating unit wiring harness
L46	Connection (5 Volt), in Climatronic operating unit wiring harness
L64	Connection (control motor), in rear Climatronic wiring harness
*	Only Camper, panel van and Kombi models with separate passenger compartment ventilation
*2	Only models with rear air distribution control motor
*3	Only models with side window vents in passenger compartment
*4	Only models with no rear air distribution control motor

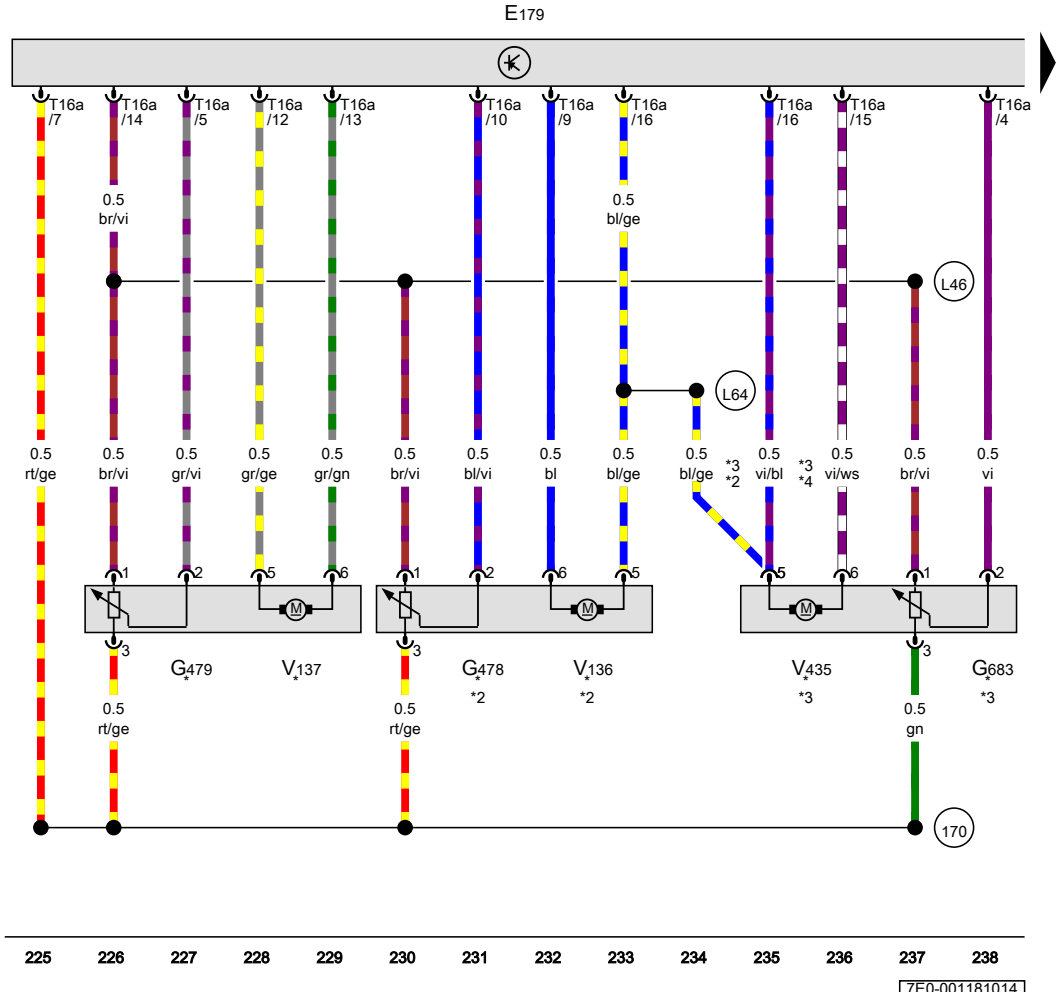

ws	=	white
sw	=	black
ro	=	red
rt	=	red
br	=	brown
gn	=	green
bl	=	blue
gr	=	grey
li	=	purple
vi	=	purple
ge	=	yellow
or	=	orange
rs	=	pink

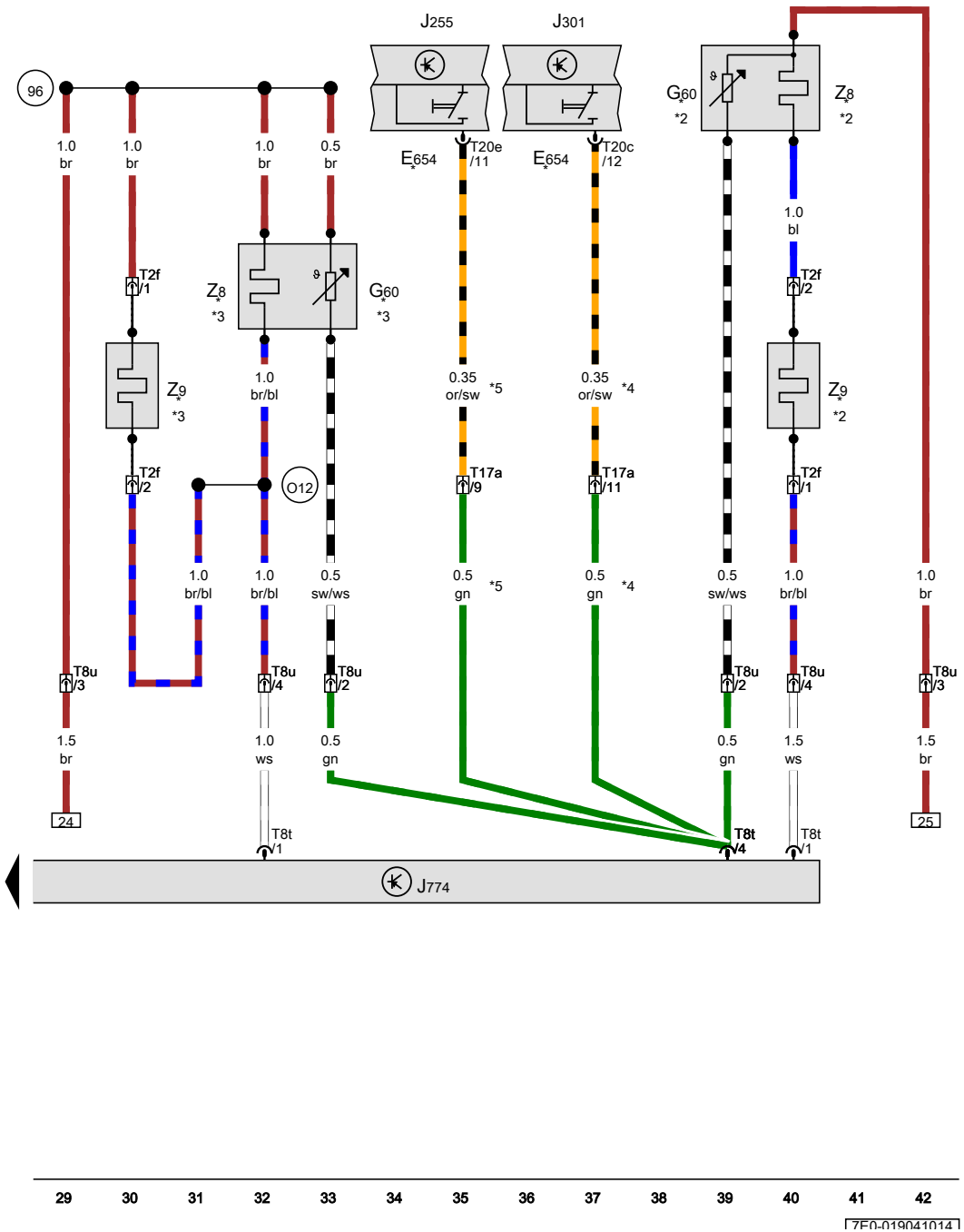

Button for right seat heating, Climatronic control unit, Air conditioning system control unit, Heated front seats control unit, Heated seat cushion for front passenger seat, Heated backrest for front passenger seat

E654	Button for right seat heating
G60	Front passenger seat temperature sensor
J255	Climatronic control unit
J301	Air conditioning system control unit
J774	Heated front seats control unit
T2f	2-pin connector, black, in front passenger seat
T8t	8-pin connector, black
T8u	8-pin connector, black, under front passenger seat
T17a	17-pin connector, black, behind glove compartment
T20c	20-pin connector, black
T20e	20-pin connector, black
Z8	Heated seat cushion for front passenger seat
Z9	Heated backrest for front passenger seat
96	Earth connection 1, in seat heating wiring harness
O12	Connection 1, in seat heating wiring harness
*	Only models with heated front passenger seat
*2	Only models with single seat on front passenger side
*3	Only models with double seat on front passenger side
*4	Only models with Climatic
*5	Only models with Climatronic

ws	=	white
sw	=	black
ro	=	red
rt	=	red
br	=	brown
gn	=	green
bl	=	blue
gr	=	grey
li	=	purple
vi	=	purple
ge	=	yellow
or	=	orange
rs	=	pink

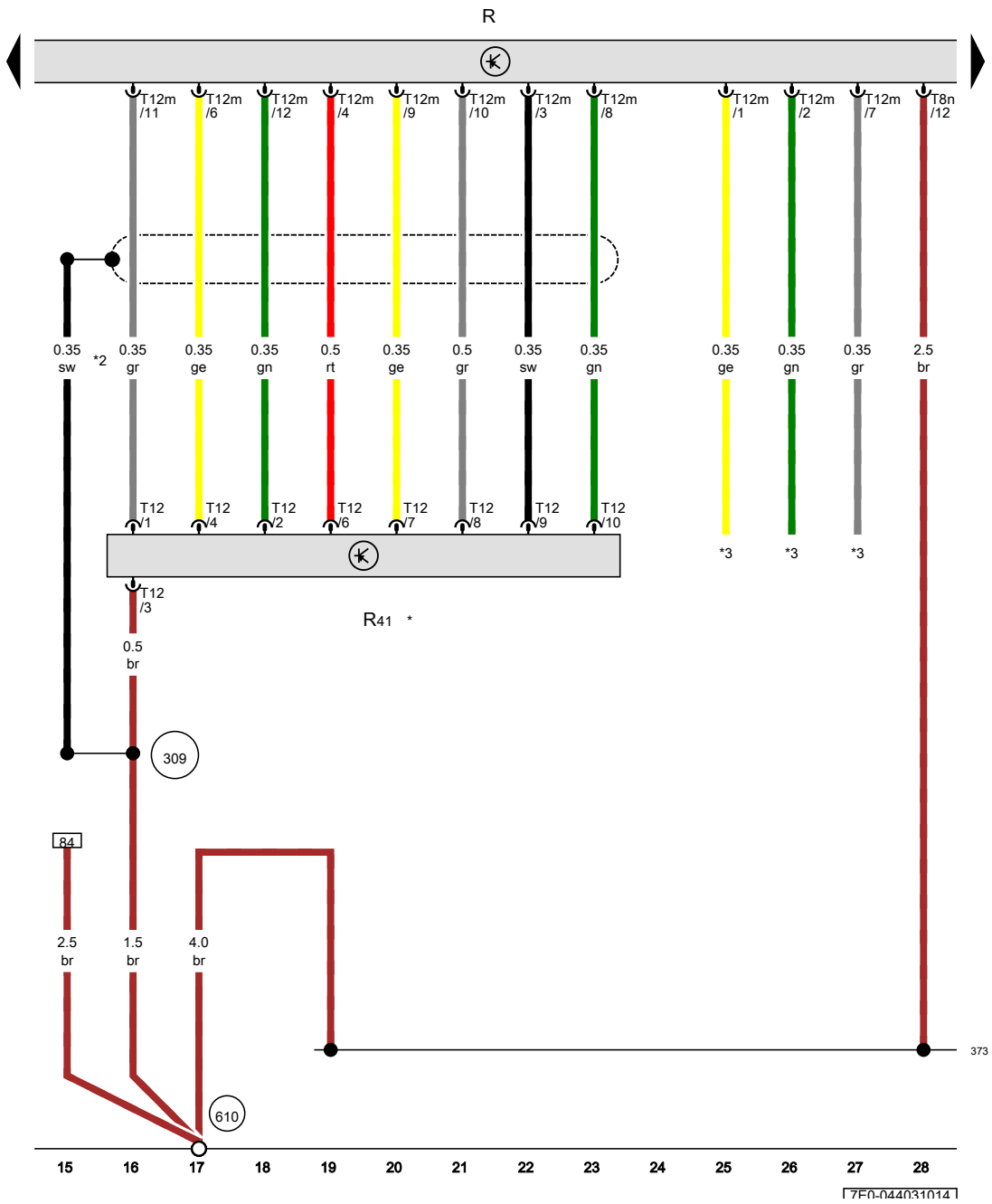

ws = white
sw = black
ro = red
rt = red
br = brown
gn = green
bl = blue
gr = grey
li = purple
vi = purple
ge = yellow
or = orange
rs = pink

Radio, CD changer

R	Radio
R41	CD changer, under front passenger seat
T8n	8-pin connector, black
T12	12-pin connector, black
T12m	12-pin connector, blue
309	Earth connection 1, screening, in CD changer wiring harness
373	Earth connection 8, in main wiring harness
610	Earth point (audio), front below centre console
*	According to equipment
*2	Wiring open end
*3	see applicable current flow diagram for multimedia system

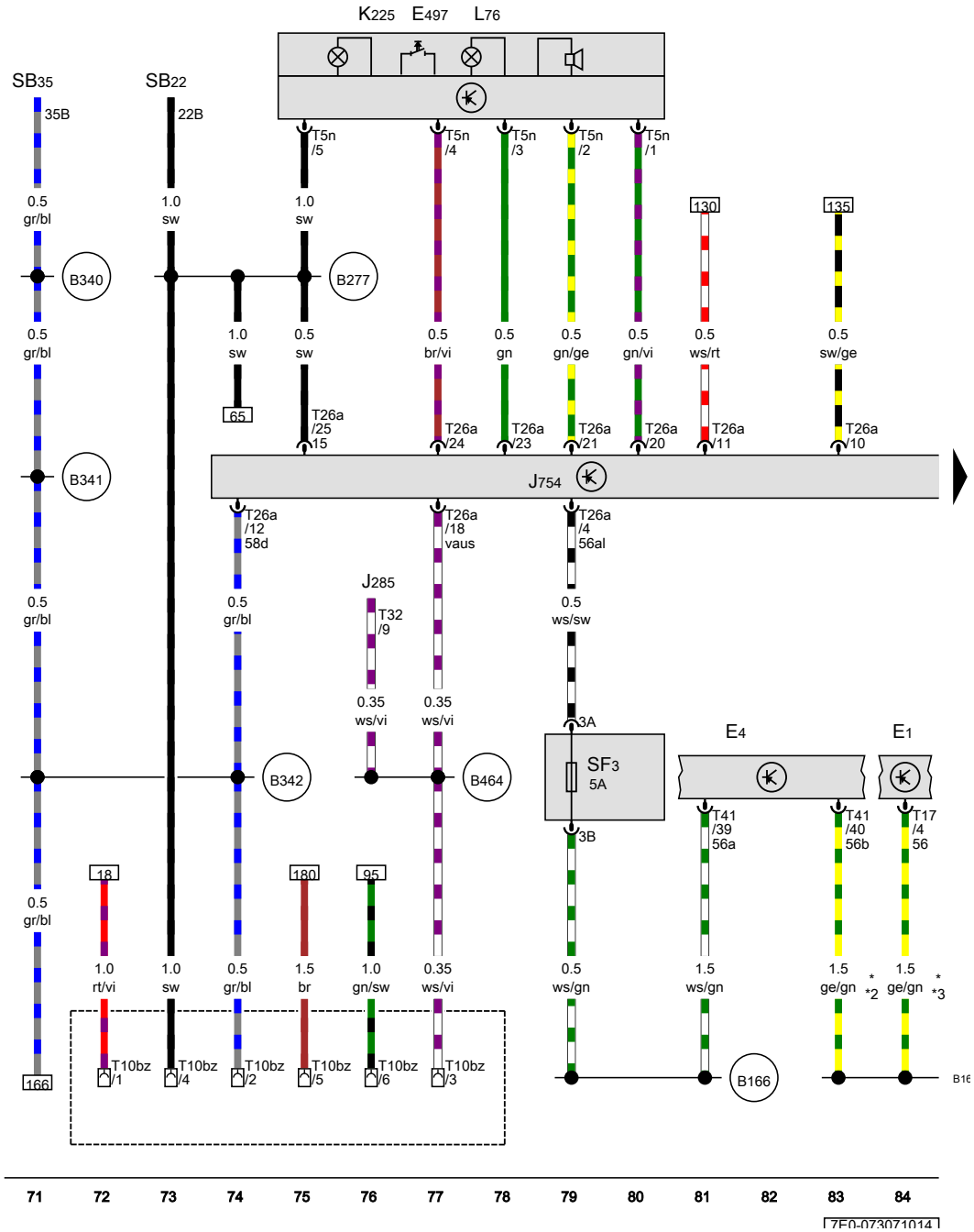

ws = white
sw = black
ro = red
rt = red
br = brown
gn = green
bl = blue
gr = grey
li = purple
vi = purple
ge = yellow
or = orange
rs = pink

Light switch, Headlight dipper and flasher switch, Accident data recorder button, Accident data memory

E1	Light switch
E4	Headlight dipper and flasher switch
E497	Accident data recorder button
J285	Control unit in dash panel insert
J754	Accident data memory
K225	Accident recorder warning lamp
L76	Button illumination bulb
SF3	Fuse 3 in fuse holder F
SB22	Fuse 22 on fuse holder B
SB35	Fuse 35 on fuse holder B
T5n	5-pin connector, black
T10bz	10-pin connector, green, under front passenger seat
T17	17-pin connector, black
T26a	26-pin connector, black
T32	32-pin connector, blue
T41	41-pin connector, grey
B166	Connection (56a), in interior wiring harness
B167	Connection (56b), in interior wiring harness
B277	Positive connection 1 (15a) in main wiring harness
B340	Connection 1 (58d), in main wiring harness
B341	Connection 2 (58d), in main wiring harness
B342	Connection 3 (58d), in main wiring harness
B464	Connection (speed signal), in main wiring harness
*	Only models with no automatic headlight control with coming home
*2	Only models with H4 headlights
*3	Only models with H7 headlights

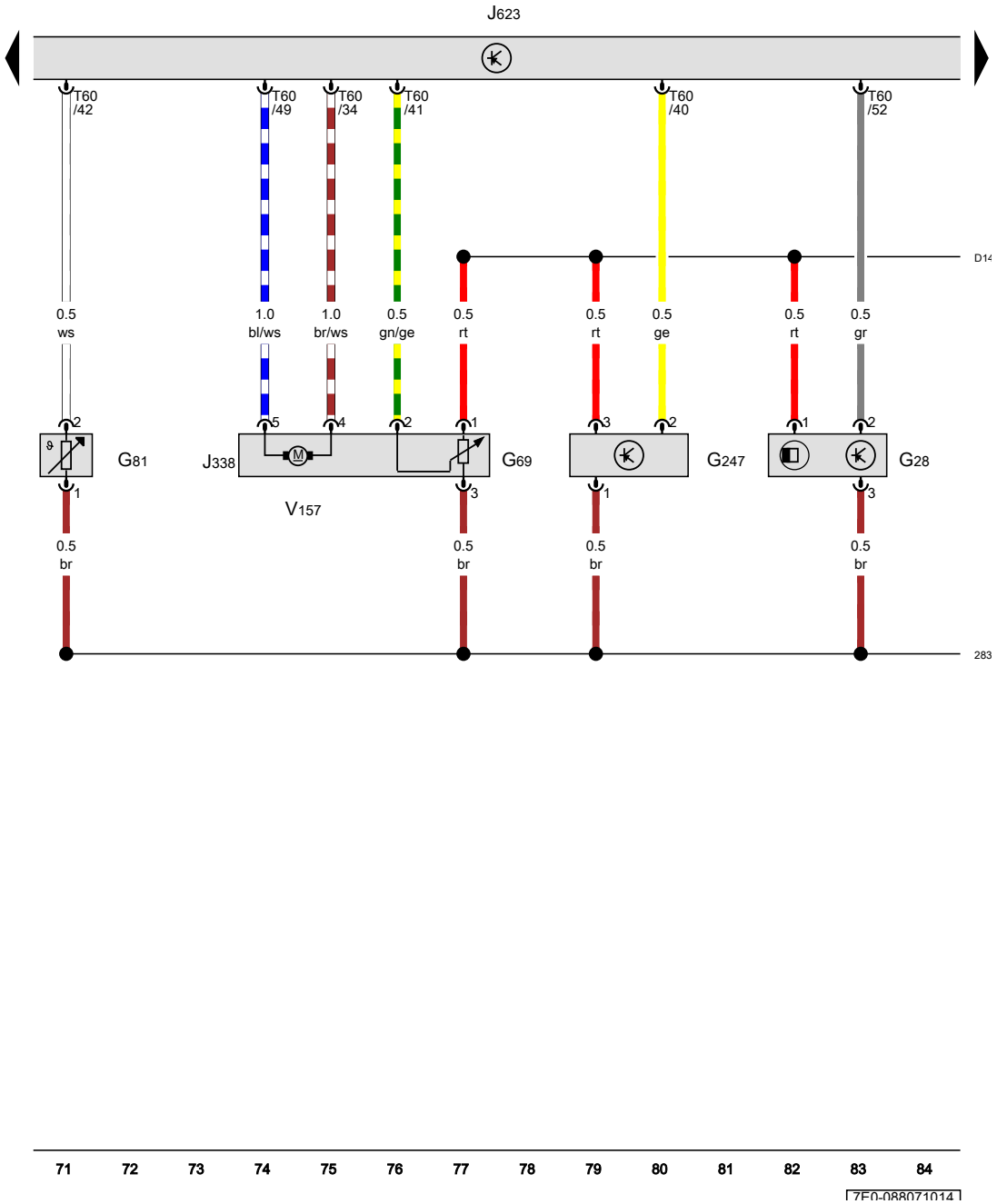

Engine speed sender, Throttle valve potentiometer, Fuel temperature sender, Fuel pressure sender, Throttle valve module, Engine control unit, Intake manifold flap motor

G28	Engine speed sender
G69	Throttle valve potentiometer
G81	Fuel temperature sender
G247	Fuel pressure sender
J338	Throttle valve module
J623	Engine control unit, in E-box in engine compartment
T60	60-pin connector, black
V157	Intake manifold flap motor
283	Earth point 2, engine prewiring harness
D141	Connection (5V) in engine prewiring harness

ws	=	white
sw	=	black
ro	=	red
rt	=	red
br	=	brown
gn	=	green
bl	=	blue
gr	=	grey
li	=	purple
vi	=	purple
ge	=	yellow
or	=	orange
rs	=	pink

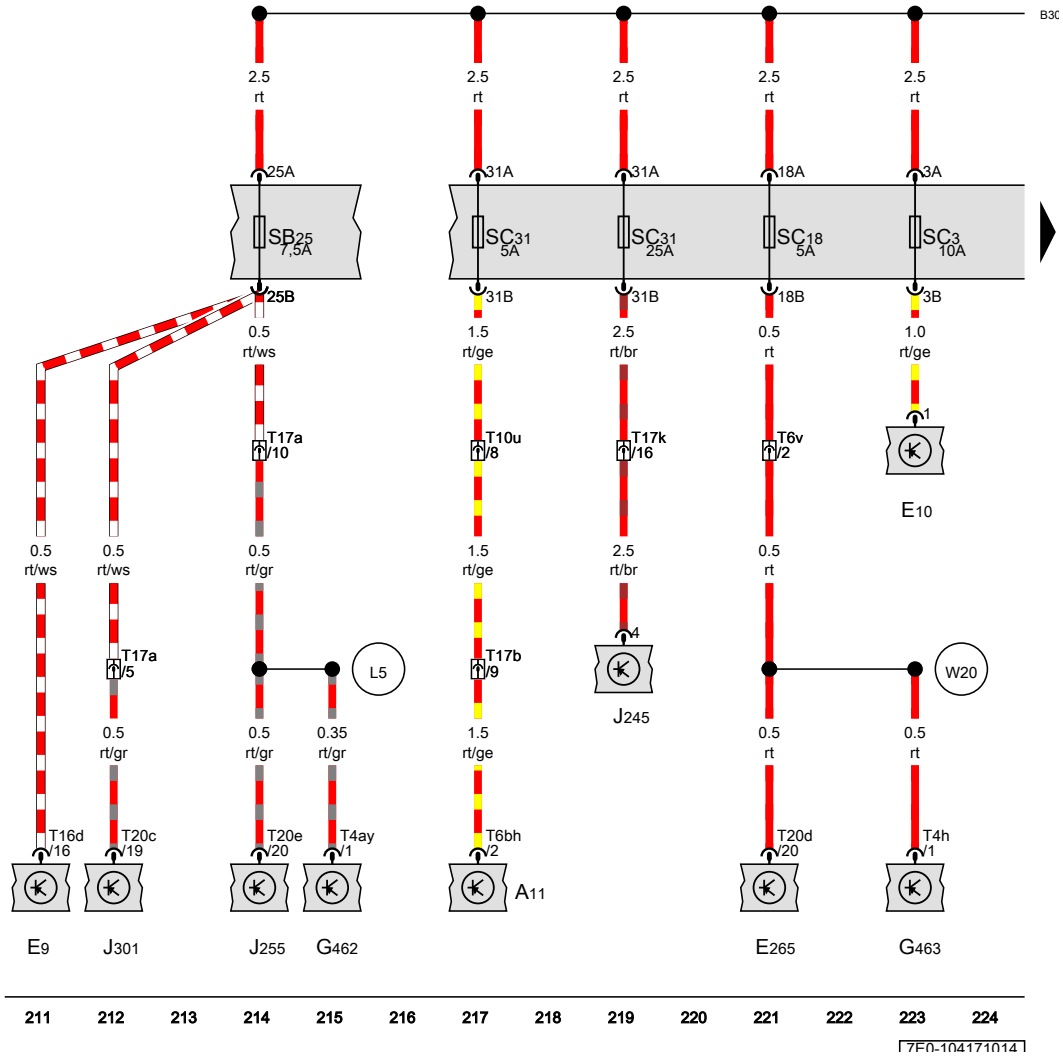

ws = white
sw = black
ro = red
rt = red
br = brown
gn = green
bl = blue
gr = grey
li = purple
vi = purple
ge = yellow
or = orange
rs = pink

Fresh air blower switch, Red Cross light switch, Operating and display unit for rear air conditioning system, Sender for front Bitron blower regulation, Rear blower regulation sender, Sliding sunroof adjustment control unit, Climatronic control unit, Air conditioning system control unit

A11	Onboard supply charger unit
E9	Fresh air blower switch
E10	Red Cross light switch
E265	Operating and display unit for rear air conditioning system
G462	Sender for front Bitron blower regulation
G463	Rear blower regulation sender
J245	Sliding sunroof adjustment control unit
J255	Climatronic control unit
J301	Air conditioning system control unit
SC3	Fuse 3 on fuse holder C, black
SC18	Fuse 18 on fuse holder C
SB25	Fuse 25 on fuse holder B
SC31	Fuse 31 on fuse holder C
T4ay	4-pin connector, black
T4h	4-pin connector, black
T6bh	6-pin connector, grey
T6v	6-pin connector, white, under front passenger seat
T10u	10-pin connector, blue, under driver seat
T16d	16-pin connector, black
T17a	17-pin connector, black, behind glove compartment
T17b	17-pin connector, black, in cupboard, bottom
T17k	17-pin connector, green
T20c	20-pin connector, black
T20d	20-pin connector, black
T20e	20-pin connector, black
B304	Positive connection 8 (30), in main wiring harness
L5	Connection 1, in evaporator housing unit wiring harness
W20	Positive connection (30a) in rear wiring harness

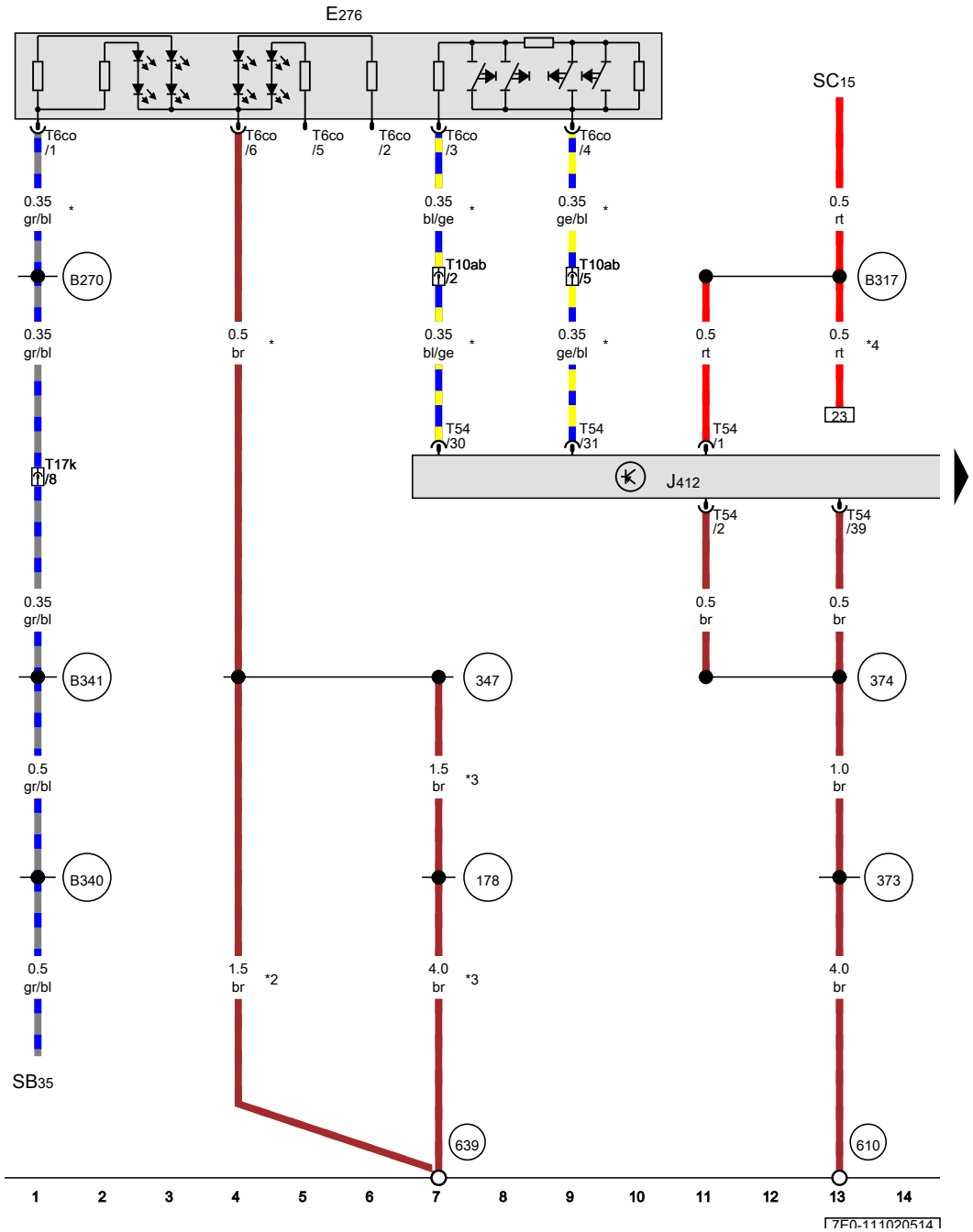

ws = white
sw = black
ro = red
rt = red
br = brown
gn = green
bl = blue
gr = grey
li = purple
vi = purple
ge = yellow
or = orange
rs = pink

Emergency assistance call button, Mobile telephone operating electronics control unit, Fuse 15 on fuse holder C

E276	Emergency assistance call button
J412	Mobile telephone operating electronics control unit, behind glove compartment
SC15	Fuse 15 on fuse holder C
SB35	Fuse 35 on fuse holder B
T6co	6-pin connector, black
T10ab	10-pin connector, white, white, in left A-pillar coupling station
T17k	17-pin connector, green, in left A-pillar coupling station
T54	54-pin connector, black
178	Earth connection, in sliding sunroof wiring harness
347	Earth connection, in roof wiring harness
373	Earth connection 8, in main wiring harness
374	Earth connection 9, in main wiring harness
610	Earth point (audio), front below centre console
639	Earth point, left A-pillar
B270	Connection (58s), in roof wiring harness
B317	Positive connection 3 (30a) in main wiring harness
B340	Connection 1 (58d), in main wiring harness
B341	Connection 2 (58d), in main wiring harness
*	According to equipment
*2	Only models with no sliding/tilting sunroof
*3	Only models with sliding/tilting sunroof
*4	Only models with voice amplification

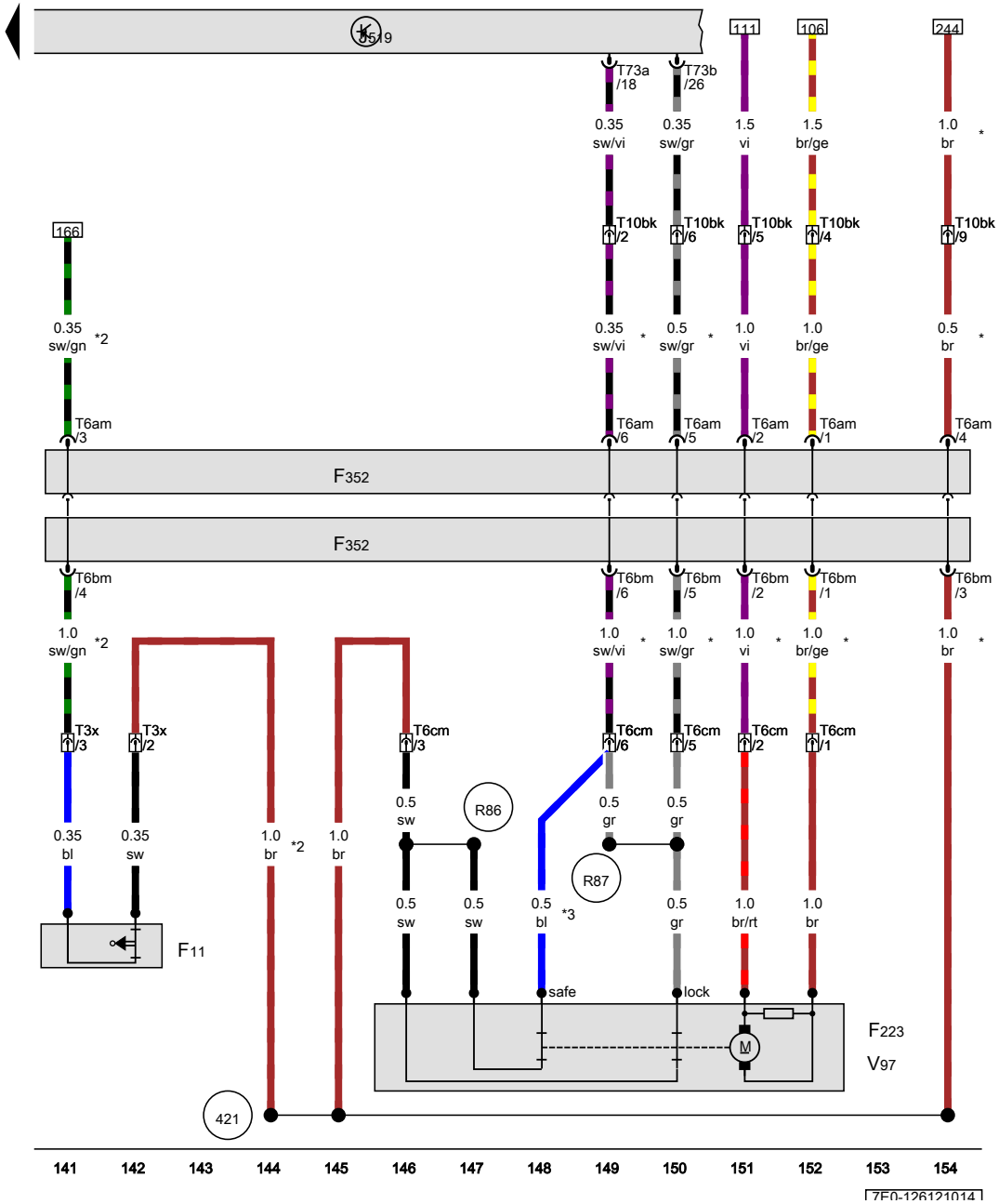

ws = white
sw = black
ro = red
rt = red
br = brown
gn = green
bl = blue
gr = grey
li = purple
vi = purple
ge = yellow
or = orange
rs = pink

Rear right door contact switch, Rear right central locking lock unit, Contact strip in right sliding door, Rear right door central locking motor

F11	Rear right door contact switch
F223	Rear right central locking lock unit
F352	Contact strip in right sliding door
J519	Onboard supply control unit
T3x	3-pin connector, black, in right sliding door
T6am	6-pin connector, Contact holder, right sliding door
T6bm	6-pin connector, Contact holder, right sliding door
T6cm	6-pin connector, black, in right sliding door
T10bk	10-pin connector, grey, under front passenger seat
T73a	73-pin connector, black
T73b	73-pin connector, white
V97	Rear right door central locking motor
421	Earth connection 1, in right sliding door wiring harness
R86	Connection 1 (central locking), in rear right door wiring harness
R87	Connection 2 (central locking), in rear right door wiring harness
*	Only models with no electric sliding doors/ power latching system
*2	Only models with manual sliding door and anti-theft alarm system
*3	Only models with SAFELOCK function

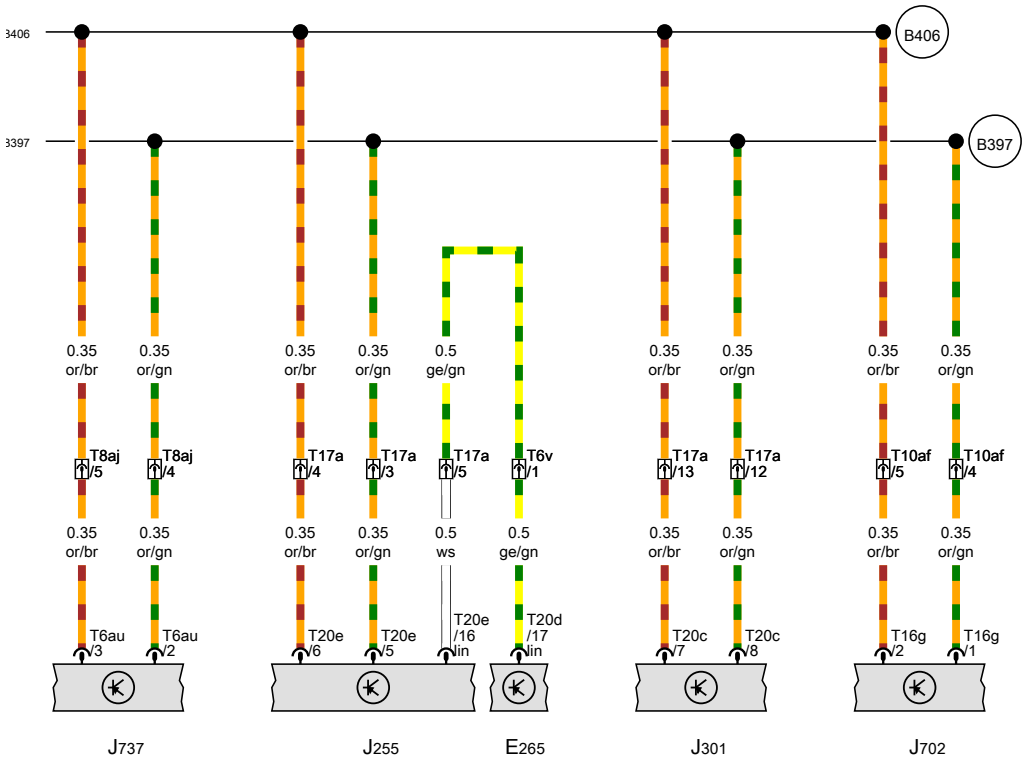

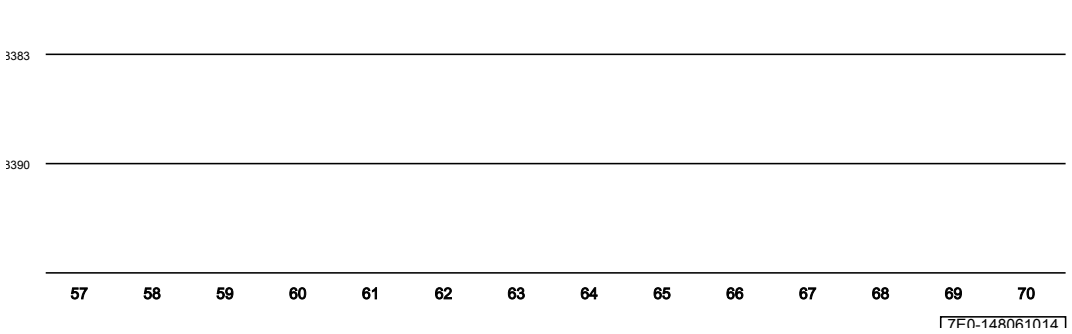

Operating and display unit for rear air conditioning system, Climatronic control unit, Air conditioning system control unit, Roof display unit, Auxiliary coolant heater control unit

E265	Operating and display unit for rear air conditioning system
J255	Climatronic control unit
J301	Air conditioning system control unit
J702	Roof display unit
J737	Auxiliary coolant heater control unit
T6au	6-pin connector, black
T6v	6-pin connector, white, under front passenger seat
T8aj	8-pin connector, black, on underbody, next to auxiliary heater
T10af	10-pin connector, blue, in left A-pillar coupling station
T16g	16-pin connector, black
T17a	17-pin connector, black, behind glove compartment
T20c	20-pin connector, black
T20d	20-pin connector, black
T20e	20-pin connector, black
B383	Connection 1 (powertrain CAN bus, high), in main wiring harness
B390	Connection 1 (powertrain CAN bus, low), in main wiring harness
B397	Connection 1 (convenience CAN bus, high), in main wiring harness
B406	Connection 1 (convenience CAN bus, low), in main wiring harness

ws	=	white
sw	=	black
ro	=	red
rt	=	red
br	=	brown
gn	=	green
bl	=	blue
gr	=	grey
li	=	purple
vi	=	purple
ge	=	yellow
or	=	orange
rs	=	pink

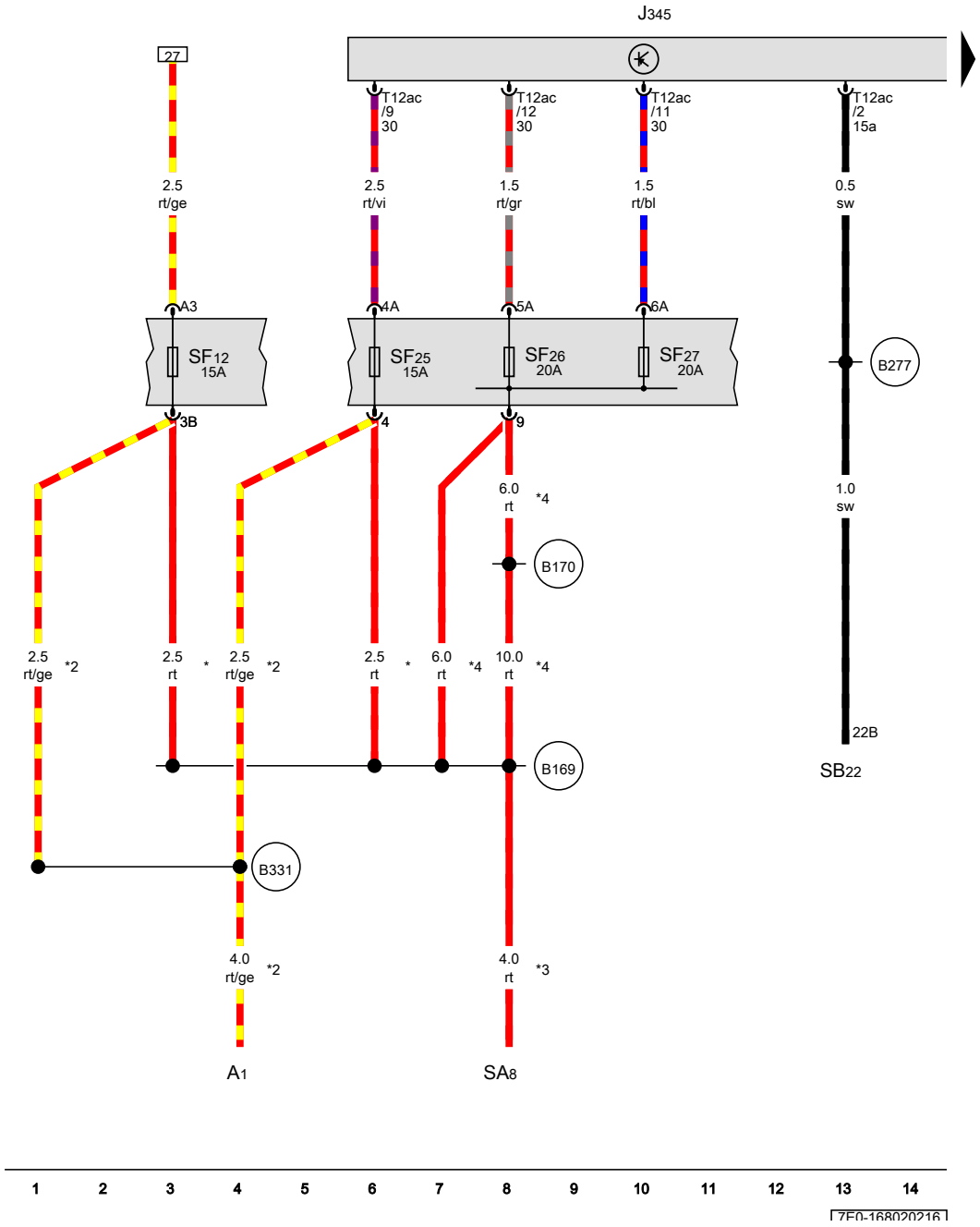

Trailer detector control unit, Fuse 12 in fuse holder F, Fuse 22 on fuse holder B, Fuse 25 in fuse holder F, Fuse 26 in fuse holder F, Fuse 27 in fuse holder F

A1	Second battery
J345	Trailer detector control unit
SA8	Fuse 8 in fuse holder A
SF12	Fuse 12 in fuse holder F
SB22	Fuse 22 on fuse holder B
SF25	Fuse 25 in fuse holder F
SF26	Fuse 26 in fuse holder F
SF27	Fuse 27 in fuse holder F
T12ac	12-pin connector, red
B169	Positive connection 1 (30), in interior wiring harness
B170	Positive connection 2 (30), in interior wiring harness
B277	Positive connection 1 (15a) in main wiring harness
B331	Positive connection 17 (30a) in main wiring harness
*	Only models with no second battery
*2	Only models with second battery
*3	Cross-section 6.0/10.0 possible
*4	According to equipment

ws	=	white
sw	=	black
ro	=	red
rt	=	red
br	=	brown
gn	=	green
bl	=	blue
gr	=	grey
li	=	purple
vi	=	purple
ge	=	yellow
or	=	orange
rs	=	pink

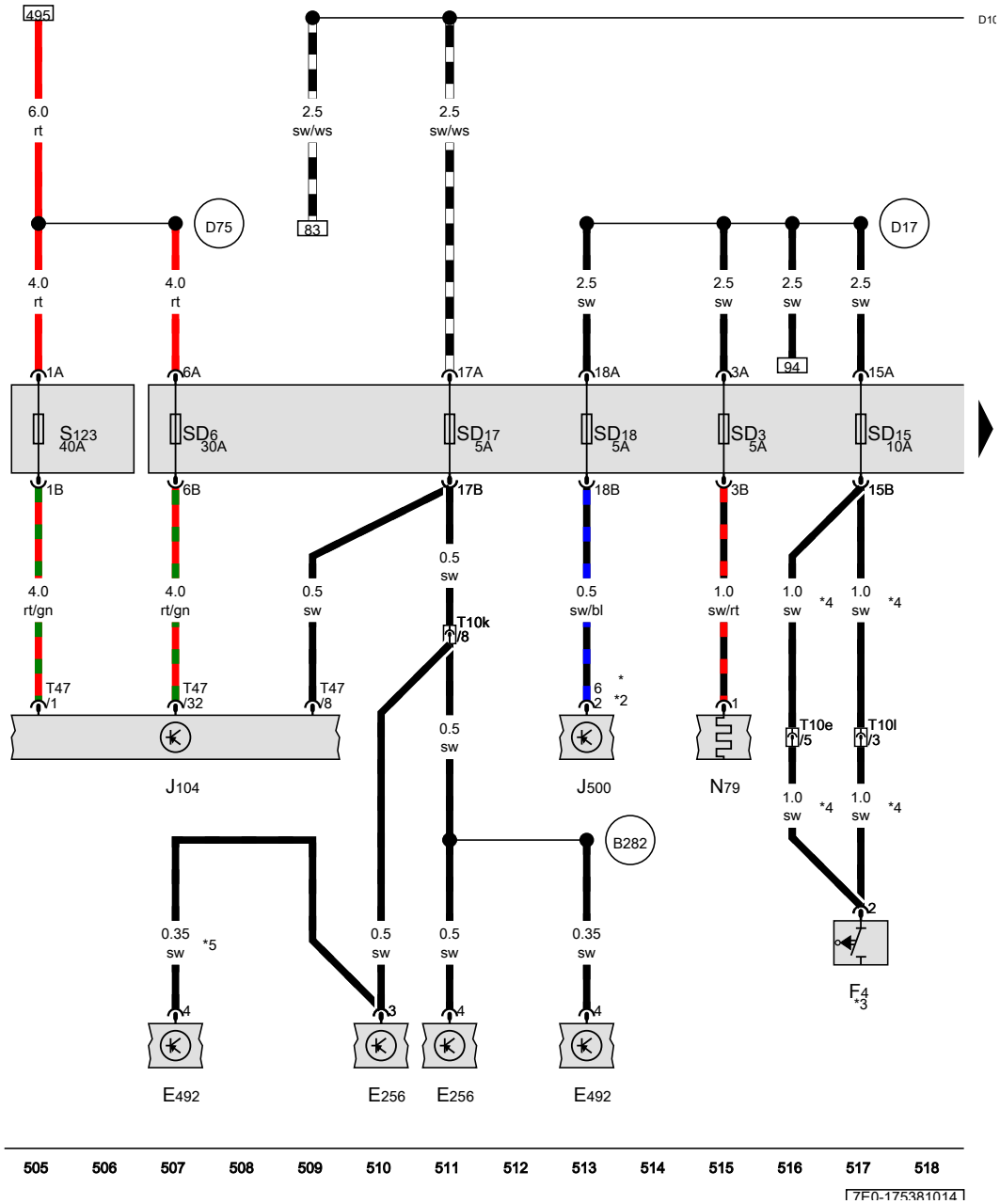

ws = white
sw = black
ro = red
rt = red
br = brown
gn = green
bl = blue
gr = grey
li = purple
vi = purple
ge = yellow
or = orange
rs = pink

TCS and ESP button, Tyre Pressure Loss Indicator button, Reversing light switch, ABS control unit, Power steering control unit, Heater element for crankcase breather, ABS control unit fuse 1

E256	TCS and ESP button
E492	Tyre Pressure Loss Indicator button
F4	Reversing light switch
J104	ABS control unit
J500	Power steering control unit
N79	Heater element for crankcase breather
SD3	Fuse 3 on fuse holder D
SD6	Fuse 6 on fuse holder D
SD15	Fuse 15 on fuse holder D
SD17	Fuse 17 on fuse holder D
SD18	Fuse 18 on fuse holder D
S123	ABS control unit fuse 1
T10e	10-pin connector, white, in E-box
T10k	10-pin connector, purple, in E-box
T10l	10-pin connector, light green, in E-box
T47	47-pin connector, black
B282	Positive connection 6 (15a) in main wiring harness
D17	Positive connection 1 (15), in engine harness
D75	Positive connection 2 (30), in engine compartment wiring harness
D100	Positive connection 2 (15), in engine compartment wiring harness

*	Up to April 2013
*2	From May 2013
*3	Only models with manual gearbox
*4	see applicable current flow diagram for engine
*5	Gradually discontinued

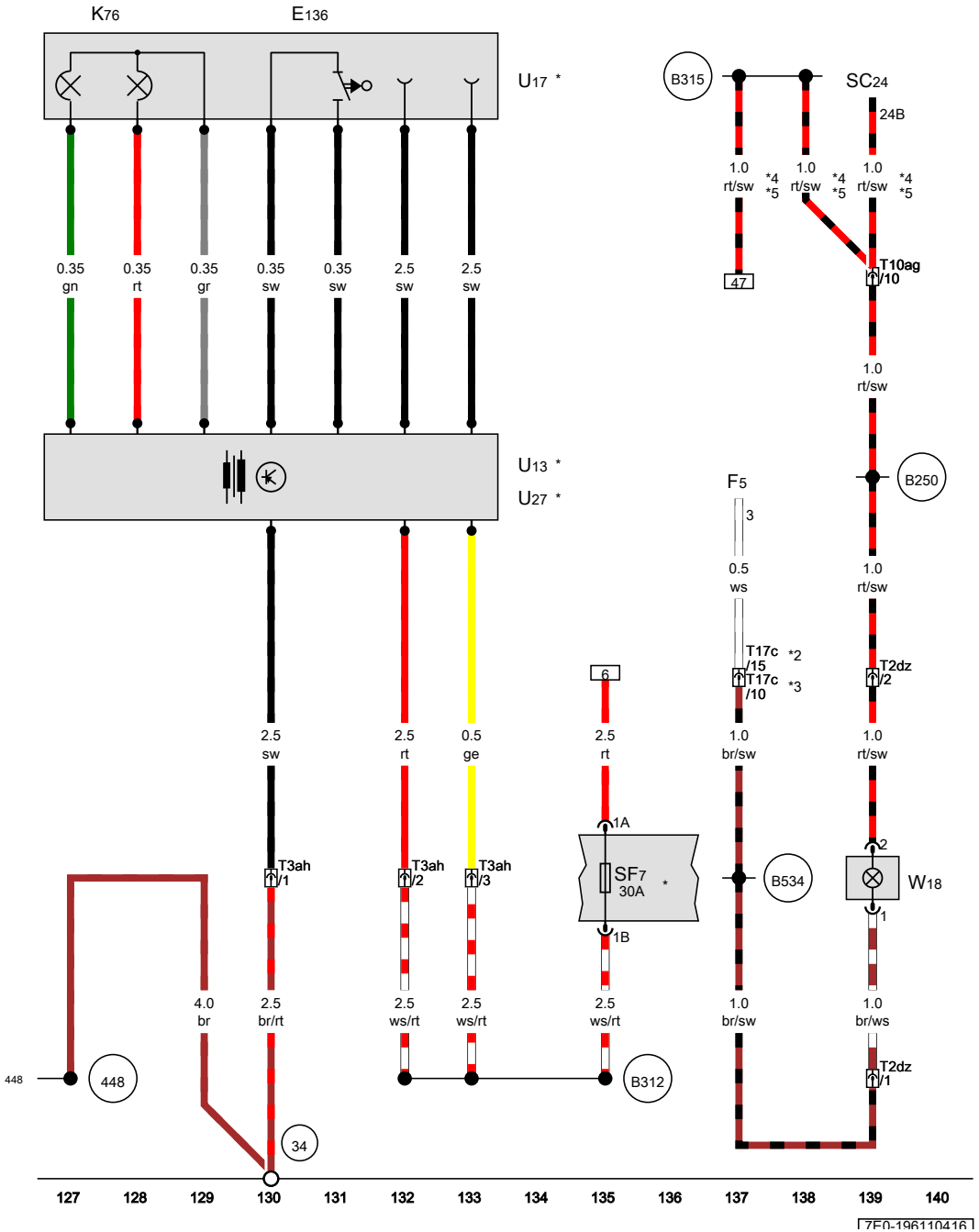

ws = white
sw = black
ro = red
rt = red
br = brown
gn = green
bl = blue
gr = grey
li = purple
vi = purple
ge = yellow
or = orange
rs = pink

DC/AC converter with socket, 12 V - 230 V, Interior socket 2, 230V, 110V, Luggage compartment light on left

E136	DC/AC converter switch, in electric socket
F5	Luggage compartment light switch
K76	Electric socket warning lamp, in electric socket
SF7	Fuse 7 in fuse holder F
SC24	Fuse 24 on fuse holder C
T2dz	2-pin connector, black, behind left D-pillar trim
T3ah	3-pin connector, black, on DC/AC converter
T10ag	10-pin connector, brown, in left A-pillar coupling station
T17c	17-pin connector, black, behind lower section of left D-pillar trim
U13	DC/AC converter with socket, 12 V - 230 V, on left B-pillar
U17	Interior socket 2, 230V, 110V, on left B-pillar
U27	DC/AC converter with socket, 12 V - 115 V, on left B-pillar
W18	Luggage compartment light on left
34	Earth point, under driver seat
448	Earth connection 1, in Camper wiring harness
B250	Positive connection, in roof wiring harness
B312	Positive connection 16 (30), in main wiring harness
B315	Positive connection 1 (30a) in main wiring harness
B534	Connection 1 (luggage compartment switch), in roof wiring harness
*	Only models with DC/AC converter
*2	Up to October 2013
*3	From November 2013
*4	According to equipment
*5	see applicable current flow diagram for interior lights

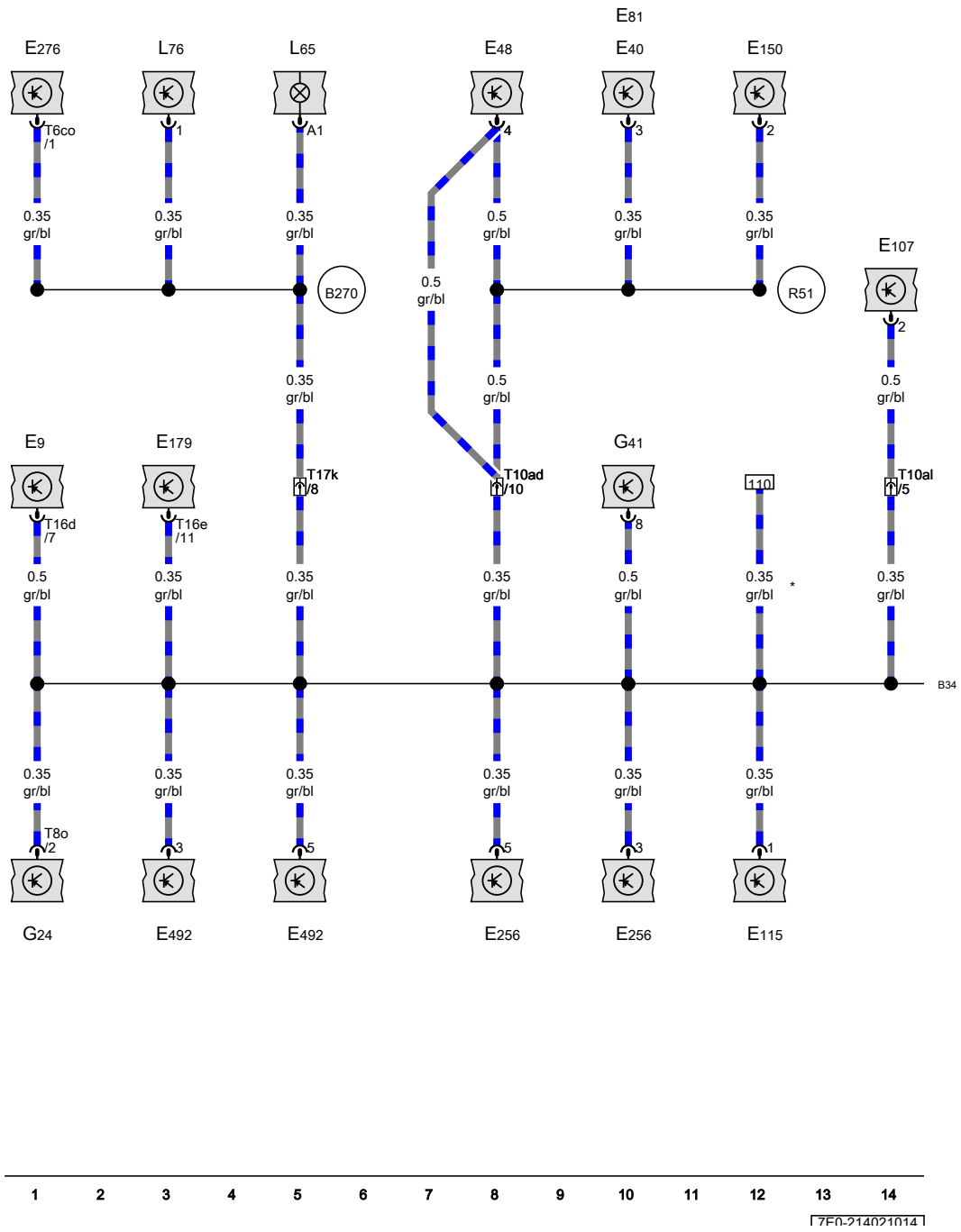

ws = white
sw = black
ro = red
rt = red
br = brown
gn = green
bl = blue
gr = grey
li = purple
vi = purple
ge = yellow
or = orange
rs = pink

Connection (58s), in roof wiring harness, Connection 2 (58d), in main wiring harness, Connection (58b), in driver side door wiring harness

E9	Fresh air blower switch
E40	Front left window regulator switch
E48	Mirror adjustment changeover switch
E81	Front right window regulator switch in driver door
E107	Window regulator switch in front passenger door
E115	Interior light switch (taxi)
E150	Driver side interior locking switch
E179	Rear fresh air blower switch
E256	TCS and ESP button
E276	Emergency assistance call button
E492	Tyre Pressure Loss Indicator button
G24	Tachograph
G41	Taximeter
L65	Sliding sunroof switch illumination bulb
L76	Button illumination bulb
T6co	6-pin connector, black
T8o	8-pin connector, white
T10ad	10-pin connector, red, on left A-pillar
T10al	10-pin connector, red, on right A-pillar
T16d	16-pin connector, black
T16e	16-pin connector, black
T17k	17-pin connector, green, on left A-pillar
B270	Connection (58s), in roof wiring harness
B341	Connection 2 (58d), in main wiring harness
R51	Connection (58b), in driver side door wiring harness
*	Only models with no dimmable instrument illumination