0

supply pressure in circuit 1, connection 21	9.8 - 10.6 bar
supply pressure in circuit 2, connection 22	9.8 - 10.6 bar
supply pressure in circuit 3, connection 23	8.1 - 8.5 bar
supply pressure in circuit 3, connection 25	7.9 - 8.5 bar
supply pressure in circuit 4, connection 24	9.8 - 10.6 bar
supply pressure in circuit 4, connection 26	9.8 - 10.6 bar
opening pressure of circuits 1, 2 and 4	6.5 - 7.0 bar
opening pressure of circuit 3	7.0 - 7.5 bar
Static closing pressure, all circuits	≥ 4.5 bar
circuit 1 activation pressure for flow-back function of circuit 3	≤ 4.5 bar
cut-out pressure of pressure regulator	9.8 - 10.6 bar
cut-in pressure of pressure regulator	1.0 - 1.8 bar below the cut-out pressure
safety valve opening pressure	12.8 - 13.2 bar
cut-in temperature of heating element	7°C
cut-out temperature of heating element	29°C
re-set time	approx. 20 sec.

pressure sensor reading, circuits 1 and 2
(connections 6.2 - 6.7 in the diagrams above)

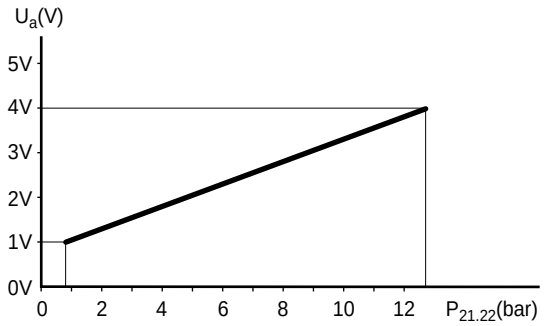

R600701

Pressure relief valve

overflow pressure	10.0 bar

09N044 leading rear axle (used on FTP vehicle)

Minimum lining thickness 5 mm

Disc brakes, SB7000 and SN7000 series

TYPE	NOTES
DAF 1200	Fitted to all vehicles

Brake drum

General

A brake drum may be used until the inside diameter has reached the maximum permissible value, as specified in the table below.

As soon as this diameter is exceeded, the brake drum must be replaced.

Brake diameter	Standard brake-drum diameter in mm		Maximum in mm	Maximum reconditioning dimension in mm
12 $^{3}/_{8}$"	314	Ovality + 0,127	317,3	316,3
13"	330,2	+ 0,127	333,2	332,3
15 $^{1}/_{2}$"	393,7	+ 0,127	396,7	395,7
16"	406,6	+ 0,250	409,6	408,6
16 $^{1}/_{2}$"	420	+ 0,250	425	423
310 mm	310	+ 0,210	313	312
325 mm	325	+ 0,230	328	327
360 mm	360	+ 0,230	363	362
375 mm	375	+ 0,230	378	377
420 mm	420	+ 0,250	425	423

09N044 leading rear axle (used on FTP vehicle)

Brake diameter	Standard brake-drum diameter in mm	Maximum in mm	Maximum reconditioning dimension in mm
300 mm	300		298 - 299 mm

The ovality (deformation) of the brake drum is checked with the drum in position on the hub, or on a brake dynamometer.

Brake drums with cracks exceeding a width of 0.7 mm or a length of 50 mm may not be reused.

0

Knorr SN7000

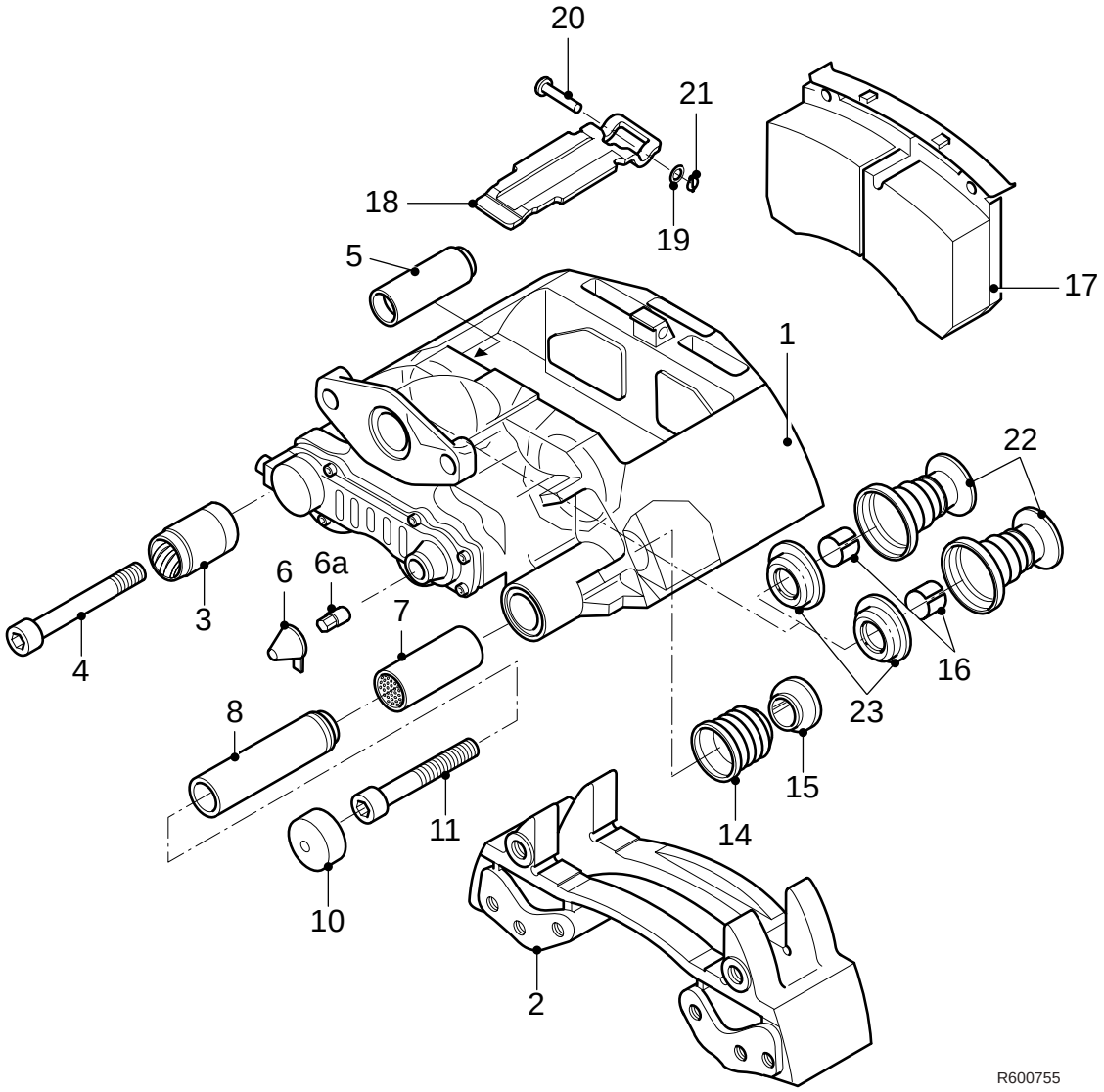

Renolit HLT2 (white) for parts 3, 6, 7, 8, the adjusters (not shown), the brake cylinder lever and the flange surface for attachment of the brake cylinder (DAF no. 1448907)

Brake diagram R600407

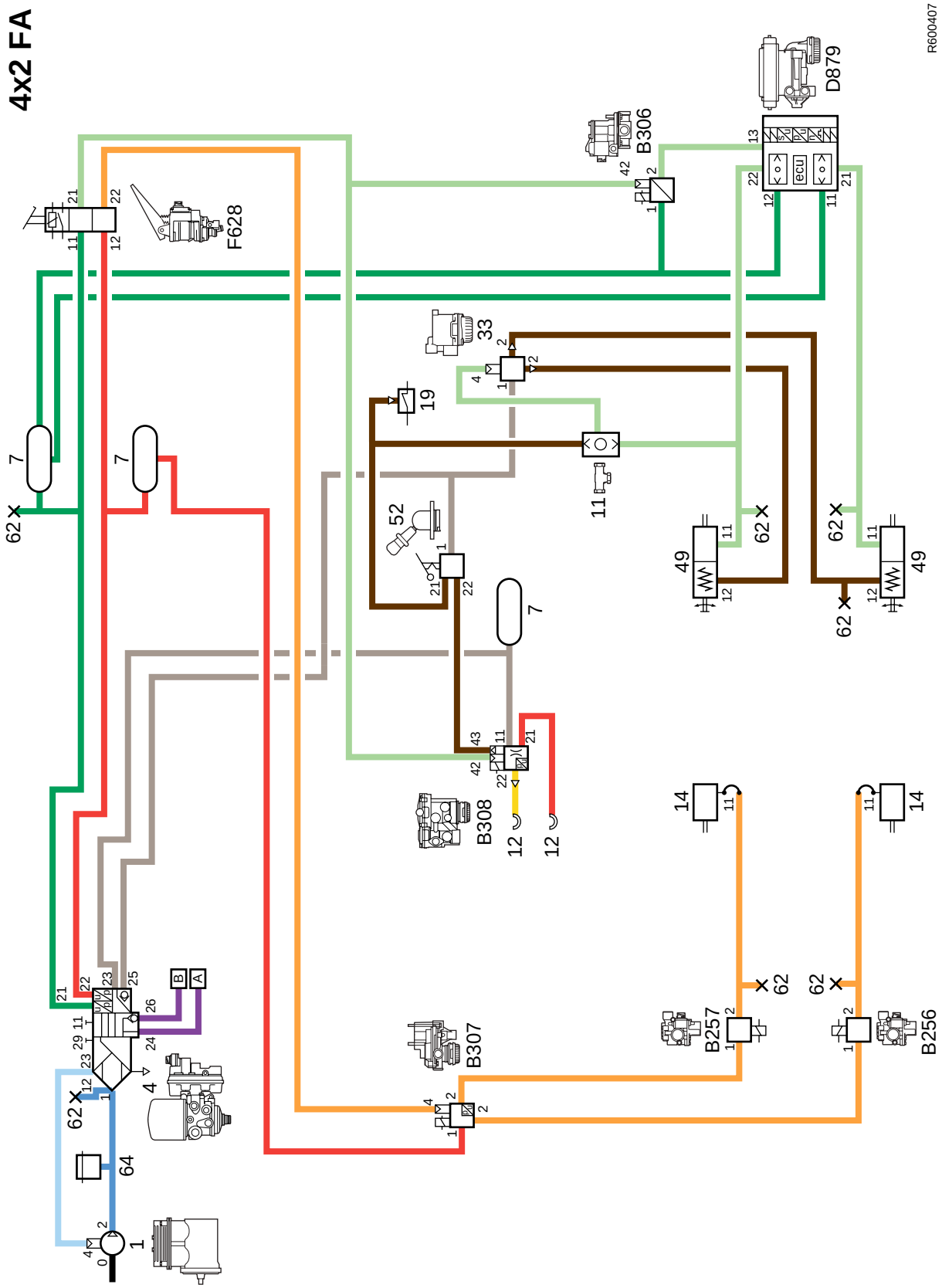

2.13 ASR SOLENOID VALVE

The ASR valve serves to transfer supply pressure to the ABS valve during an ASR differential brake control. Depending on the slip, the ABS valve will control the brake pressure to the respective brake chamber.
The ASR-valve is a simple electropneumatic valve, which is normally closed, that transfers air pressure when it is electrically energised.
The energising is controlled by the ABS/ASR electronic unit.

Note:
The vent (3) must always point downwards.

If coil E of the ASR valve is energised, core B will move down against the pressure of spring F. Seal A will now open connecting point 1, so that supply pressure can leave the valve via connecting point 2. Opening C and therefore vent 3 are also closed as core B moves downwards.

When coil E is no longer energised, core B will move upward under the influence of spring F. This action will close connecting point 1 and open opening C. Connecting point 2 is now connected to vent 3.

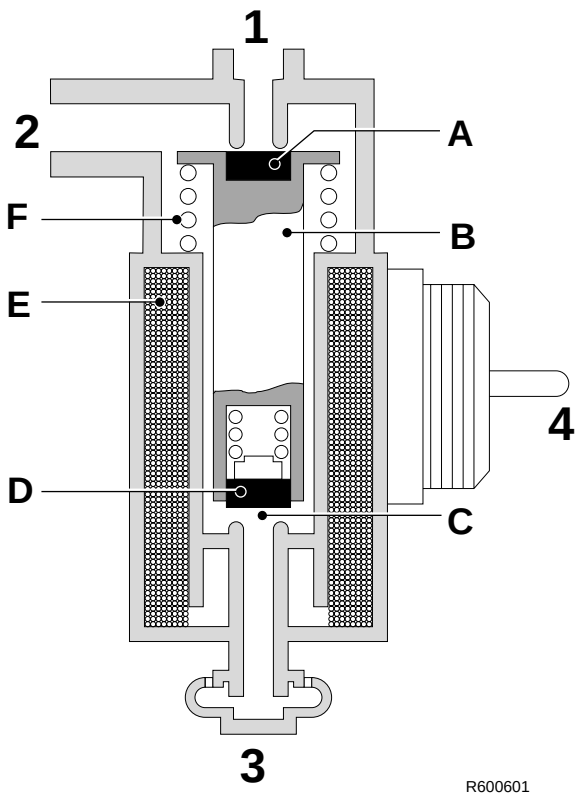

2.14 EMERGENCY FILLING/TEST CONNECTION

In various places in the brake system there are test connections for carrying out inspections and adjustments. A pipe leads from point 24 of the air dryer to the rear left of the cab. There is a test connection here that can be used as an emergency filling/tyre pump connection.

Note:
With a leaf-sprung front axle this test connection is on point 11 of the air dryer.

If a pipe is connected to the test connection, screwing in the union will lift the spring-loaded valve (A) from its seat, opening the supply. If the union is removed, the valve is pushed onto its seat by spring B, closing the supply.

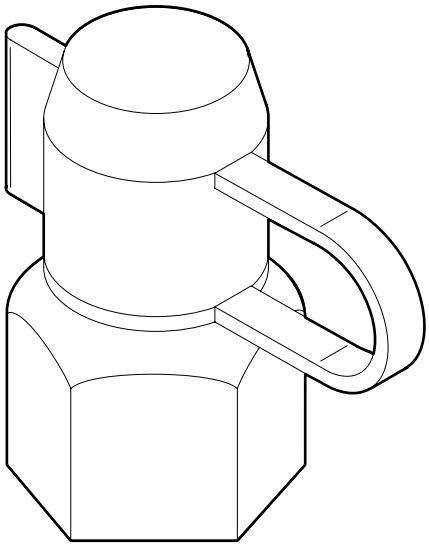

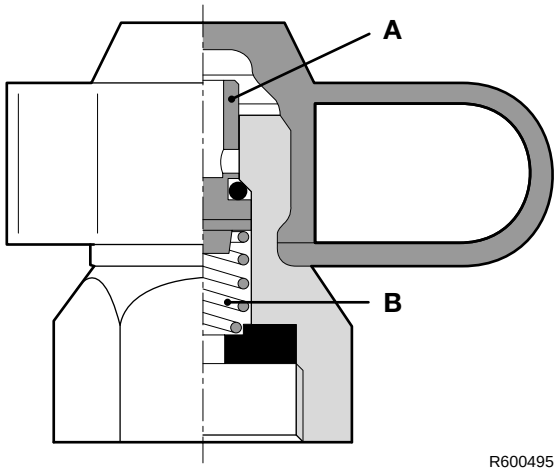

2.18 SPRING BRAKE CYLINDER

Purpose
The purpose of the spring brake cylinder is to force the brake pads/shoes against the disc/drum when the service or parking brake is operated.

Operation, spring brake cylinder
The spring brake cylinder consists of two parts: a part for the service brake, which is designed as a normal brake cylinder, and a part for the parking brake, being a spring brake cylinder.

Normal position during driving.
The air reservoirs must be at a safe pressure before you start driving. If this is not the case, a warning signal (e.g. a buzzer) will be transmitted.
If this pressure is admitted to the spring brake cylinder, the piston will compress the powerful spring. The push rod is no longer under load and will go into the non-braked position due to the operation of the spring, etc.

Service brake
Because the brake cylinder and the spring brake cylinder are separate, the spring brake cannot affect the operation of the service brake.
When the service brake is applied, the powerful spring continues to be compressed, while there is air pressure on the diaphragm of the brake cylinder. When the foot brake valve is operated, the compressed air passes through connection point 11 into the chamber behind the diaphragm. The diaphragm with push rod is pushed out against the spring pressure.
The air on the other side of the diaphragm can escape via vent holes. When the brakes are released, the spring forces the push rod and the diaphragm back into their original position.

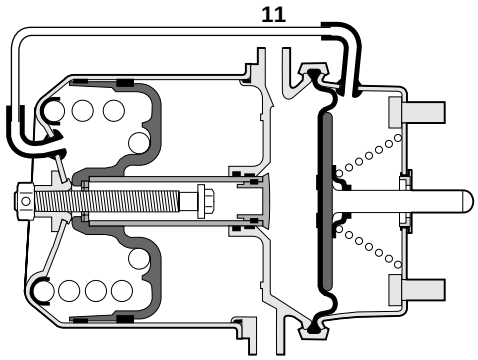

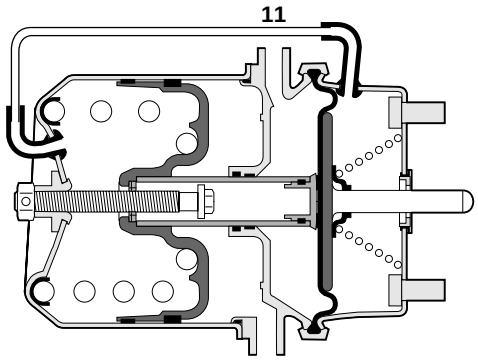

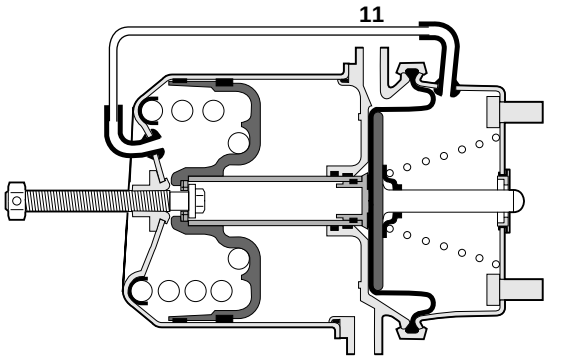

R600507

2.22 DISC BRAKE

Variants
The disc brake construction consists of the brake disc and the brake calliper. There are two variants of this construction:

- Knorr SB7000, recognisable by the divided housing between the brake cylinder and the brake pad holder and the rubber sleeve.
- Knorr SN7000, recognisable by the undivided housing between the brake cylinder and the brake pad holder and the steel cap.

The Knorr SN7000 construction used on all disc-brake front axles and on air-sprung rear axles. On leaf-sprung rear axles the Knorr SB7000 construction is used. Operation of the two variants is identical. Only overhauling and the parts of the brake calliper differ.

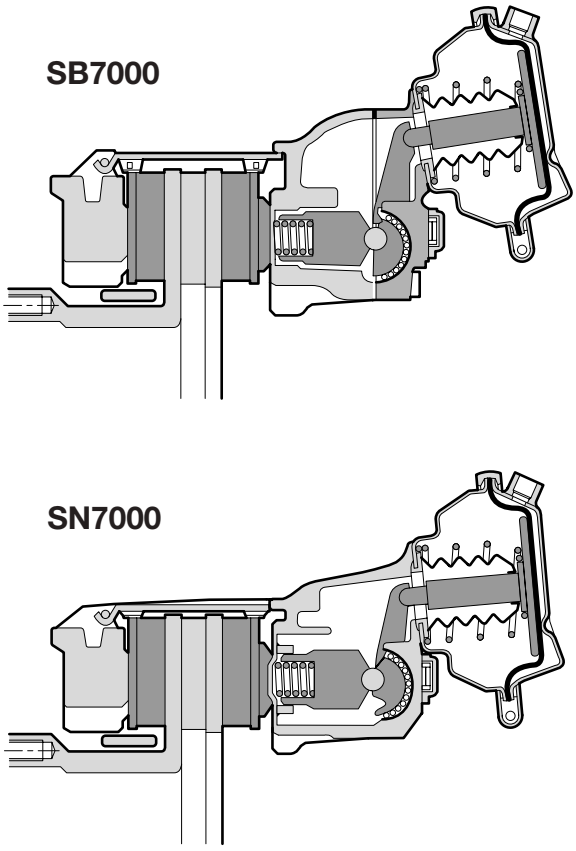

R600707

Operation
Brakes
This disc brake works using a pneumatic brake chamber or spring brake cylinder.

If the brake is applied, the brake cylinder push rod presses against the eccentrically mounted lever (1).
Via bridge 2 and threaded bushes 3, the brake pad is pressed against the brake disc (4) at two points on the inside.
Due to the reaction force (F2) at the eccentric, the floating brake saddle (5) will also press the opposite brake pad with the same force (F2).

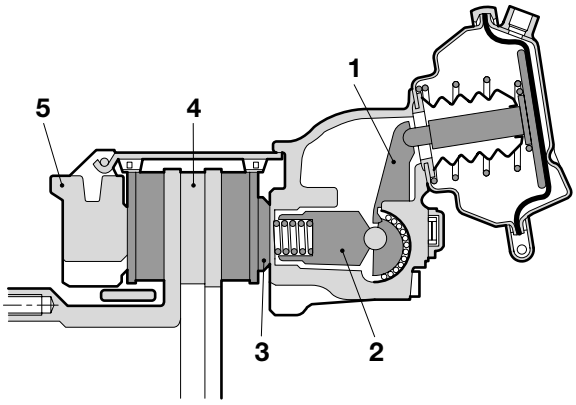

R600486

Adjusting
One of the two threaded bushes (3) is equipped with the mechanics for automatic adjustment of the play between the brake pads and brake disc.
This adjuster and the eccentric have teeth (6) that engage each other.
If the play is too great, the adjuster (8) will be rotated by these teeth the next time the brakes are applied, so that the play will be reduced.
Under normal conditions, the adjuster will push against the brake pad before rotation can take place. However, if rotation does take place, it will be absorbed by a slip coupling.
The rotation of the adjuster is transferred by means of a chain (7) to the other adjuster.
By removing a rubber cap (9) where the automatic adjuster is located, a hexagon is revealed. Using a ring spanner, the play can be manually set by adjusting this hexagon.

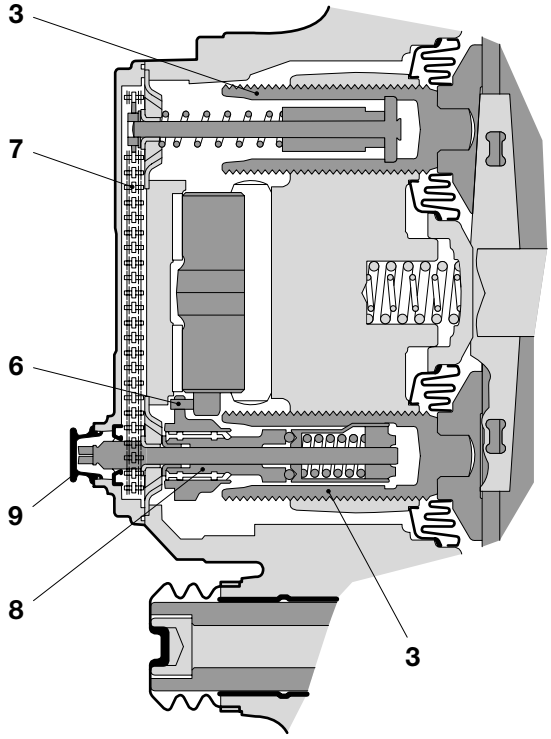

R600487

Wear indicator
The wear sensor, which is fitted on the adjustment mechanism of the brake calliper, contains a series connection of a resistor and a switch (1). The switch is normally closed and the circuit has a resistance equal to the value of the resistor. When the brake pads are worn, the circuit is interrupted.
This is the signal for the VIC system to activate the ‘brake pad wear’ warning symbol on the instrument panel.

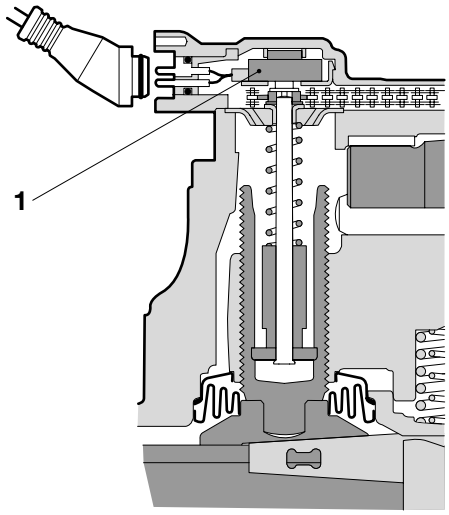

R600488

3.21 REMOVAL AND INSTALLATION, KNORR SN7000 BRAKE CALLIPER

Make sure no fingers get trapped between the brake calliper and the brake calliper carrier during and following removal of the brake pads and when a new brake calliper is installed. Always take hold of the brake calliper on the outside.

Removing the brake calliper

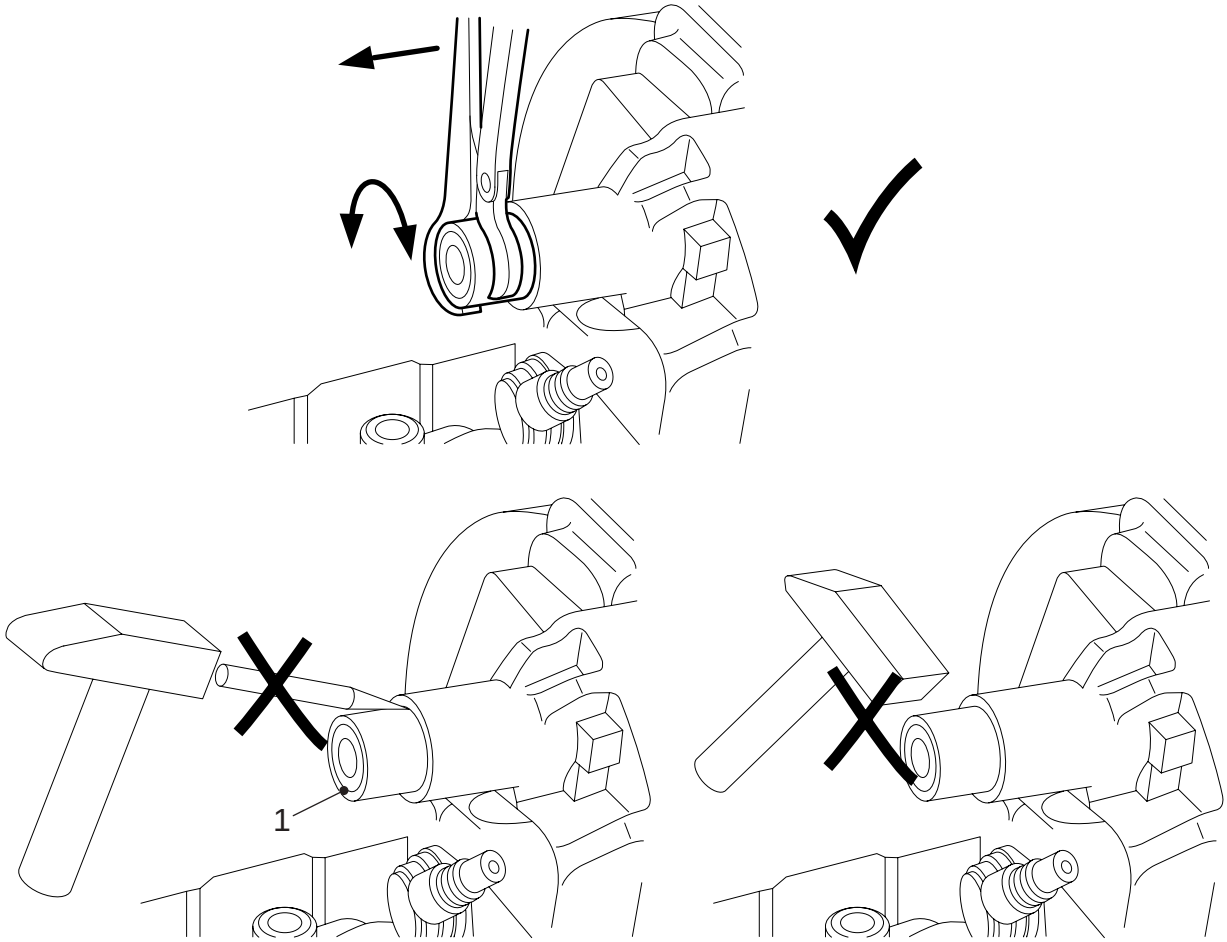

R600765

1. Remove the brake pads.
2. Remove the brake cylinder.
3. Remove the plug for the brake pad wear indicator.
4. Remove the steel cap (1) from the brake calliper. When doing this, do not use force and avoid damage to the brake calliper.
   If in particular the internal part of the brake calliper is damaged this may result in the movable guide of the brake calliper no longer working. The steel cap must not be re-used.

Fitting bellows

Note:
Do not screw the adjusters entirely out of the brake calliper, as the entire brake calliper would then have to be replaced.

1. Check the screw thread in the adjusters.
2. Grease the screw thread of the adjusters. See "Technical data".
3. Screw the adjusters back into the brake calliper.
4. Fit new bearing bushes (161) on the adjusters.
5. Fit the thrust pieces and bellows (13) on the adjusters.
6. Using the pressure tool and a pin from the special tool set (DAF no. 1329494) (B), press the bellows into its seat.
7. Turn the pressure tool (B) round and press the thrust pieces (13) onto the adjusters.

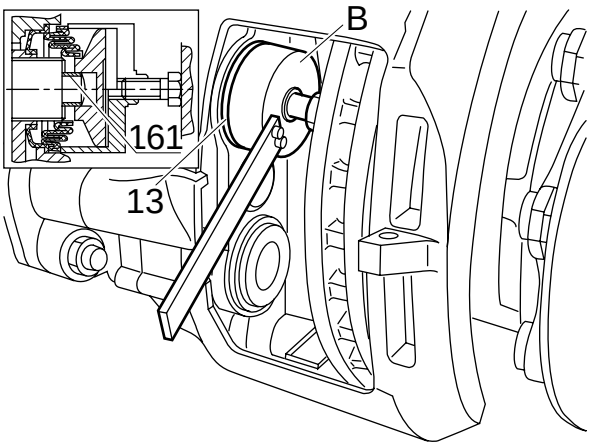

R600470

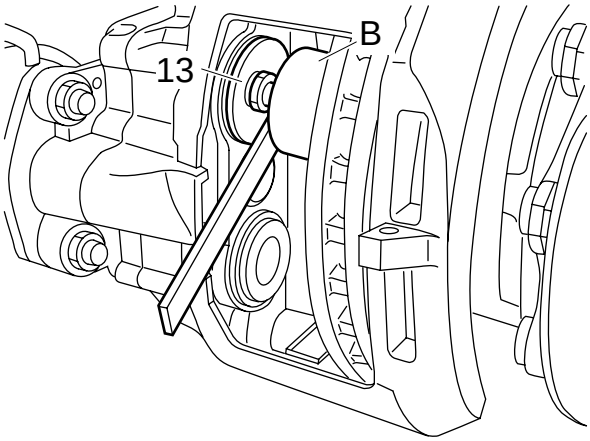

R600465

Note:
The operations described above can also be performed if the brake calliper has been removed. In that case an additional pin (8) from the special tool set (DAF no. 1329494) must be used, since the brake disc cannot be used for support.

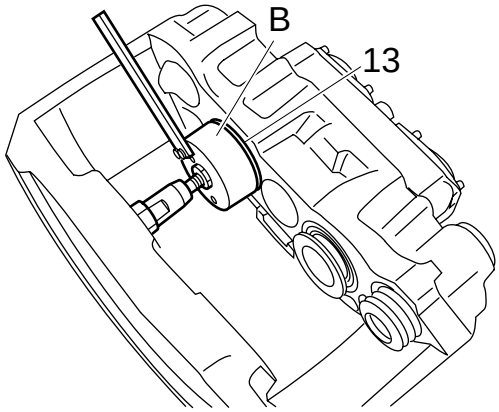

R600464

Assembling the spring brake section

1. Insert the top spring retainer in the spring brake cylinder.
2. Fit a new, greased sleeve on the lower spring retainer.
3. Fit a new O-ring and sealing ring in the intermediate housing of the spring brake cylinder.
4. Fit the bottom spring retainer, greased, in the intermediate housing.
5. Place the spring on the bottom spring retainer.
   The end of the spring should be placed against the cam in the spring retainer.
6. Place the spring brake cylinder and the auxiliary tool over the spring.
7. Fit four studs in the attachment holes. Pay attention to the marks.
8. Using the special tool, apply pressure to the spring, so that the two halves of the housing come into contact with one another. The studs also serve as guides.
9. Install four attachment bolts and tighten them to the specified torque. See "Technical data".
10. Remove the studs and tighten the remaining four attachment bolts to the specified torque.
11. Remove the wrench.
12. Remove the complete spring brake cylinder from the special tool.
13. Assemble the spring brake cylinder in such a way that the release bolt in the spring brake cylinder touches the top spring retainer. Screw the release bolt into the spring retainer.
14. Fit the O-ring and sealing ring on the release bolt. Fit the nut and clamping pin, and tighten the release bolt using the specified torque. See "Technical data".

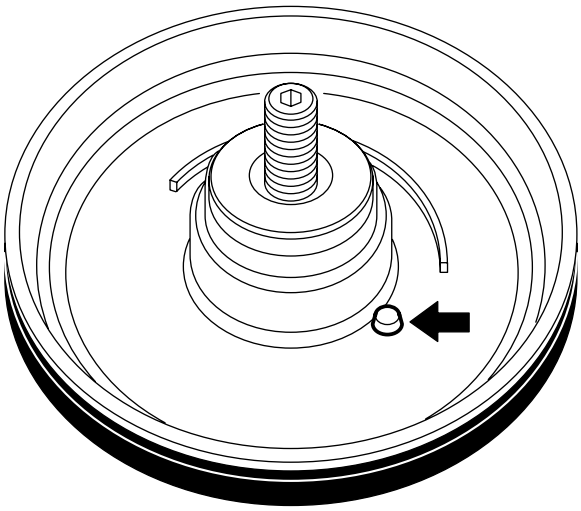

R600203

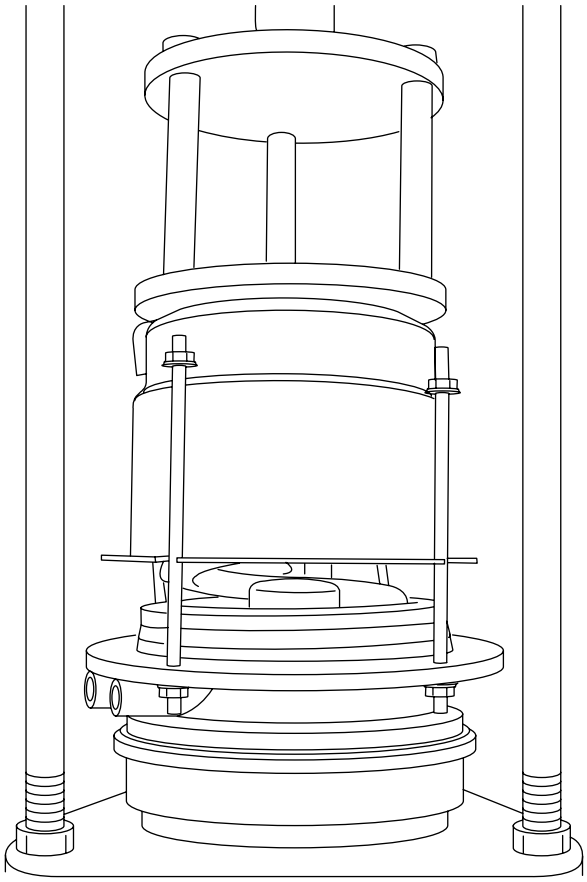

R600204

15. Fit the flexible bleed pipe with the sinter filter fitted at the brake chamber side. Ensure that the filter is correctly mounted in the flexible bleed pipe, to prevent any dirt from entering the spring brake section.